Deutsches Institut für Bautechnik DIBt

Member of EOTA
www.eota.eu

Approval body for construction products and types of construction

Bautechnisches Prüfamt

An institution established by the Federal and Laender Governments

Designated according to Article 29 of Regulation (EU) No 305/2011 and member of EOTA (European Organisation for Technical Assessment)

European Technical Assessment

ETA-09/0338 of 18 June 2024

English translation prepared by DIBt - Original version in German language

General Part

Technical Assessment Body issuing the European Technical Assessment:	Deutsches Institut für Bautechnik
Trade name of the construction product	JORDAHL anchor channel JTA, JZA, JXA and JXA-PC
Product family to which the construction product belongs	Anchor channels
Manufacturer	PohlCon GmbH Nobelstraße 51 12057 Berlin DEUTSCHLAND
Manufacturing plant	14959 Trebbin, Industriestr. 5
This European Technical Assessment contains	72 pages including 3 annexes which form an integral part of this assessment
This European Technical Assessment is issued in accordance with Regulation (EU) No 305/2011, on the basis of	EAD 330008-04-0601-v01, Edition 03/2024

Deutsches Institut für Bautechnik
Kolonnenstraße 30 B | 10829 Berlin | GERMANY | Phone: +49 30 78730-0 | Fax: +49 30 78730-320 | Email: dibt@dibt.de | www.dibt.de

The European Technical Assessment is issued by the Technical Assessment Body in its official language. Translations of this European Technical Assessment in other languages shall fully correspond to the original issued document and shall be identified as such.

Communication of this European Technical Assessment, including transmission by electronic means, shall be in full. However, partial reproduction may only be made with the written consent of the issuing Technical Assessment Body. Any partial reproduction shall be identified as such.

This European Technical Assessment may be withdrawn by the issuing Technical Assessment Body, in particular pursuant to information by the Commission in accordance with Article 25(3) of Regulation (EU) No 305/2011.

Specific Part

1 Technical description of the product

The JORDAHL anchor channel JTA, JZA, JXA and JXA-PC is a system consisting of C-shaped channel profile of carbon steel and stainless steel and at least two metal anchors non-detachably fixed to the channel back and channel bolts.

The anchor channel is embedded surface-flush in the concrete. Channel bolts JORDAHL T-bolts with appropriate hexagon nuts and washers are fixed to the channel.

The product description is given in Annex A.

2 Specification of the intended use in accordance with the applicable European Assessment Document

The performances given in Section 3 are only valid if the anchor channel is used in compliance with the specifications and conditions given in Annex B.

The verifications and assessment methods on which this European Technical Assessment is based lead to the assumption of a working life of the anchor channel of at least 50 years. The indications given on the working life cannot be interpreted as a guarantee given by the producer, but are to be regarded only as a means for choosing the right products in relation to the expected economically reasonable working life of the works.

3 Performance of the product and references to the methods used for its assessment

3.1 Mechanical resistance and stability (BWR 1)

Essential characteristic	Performance
Characteristic resistance under static and quasi-static tension loading	
- Resistance to steel failure of anchors	$N_{Rk,s,a}$ see Annex C1 to C4
- Resistance to steel failure of the connection between anchors and channel	$N_{Rk,s,c}$ see Annex C1 to C4
- Resistance to steel failure of channel lips and subsequently pull-out of channel bolt	$N^0_{Rk,s,l}$; $s_{l,N}$ see Annex C1 to C4
- Resistance to steel failure of channel bolt	$N_{Rk,s}$ see Annex C7
- Resistance to steel failure by exceeding the bending strength of the channel	s_{max} see Annex A10 and A11 $M_{Rk,s,flex}$ see Annex C5 and C6
- Maximum installation torque to avoid damage during installation	$T_{inst,g}$; $T_{inst,s}$ see Annex B5 and B6
- Resistance to pull-out failure of the anchor	$N_{Rk,p}$ see Annex C8 to C11
- Resistance to concrete cone failure	h_{ef} see Annex B3 and B4 $k_{cr,N}$; $k_{ucr,N}$ see Annex C8 to C11
- Minimum edge distances, spacing and member thickness to avoid concrete splitting during installation	s_{min} see Annex A10 and A11 c_{min} ; h_{min} see Annex B3 and B4
- Characteristic edge distance and spacing to avoid splitting of concrete under load	$s_{cr,sp}$; $c_{cr,sp}$ see Annex C8 to C11
- Resistance to blowout failure - bearing area of anchor head	A_h see Annex A7 and A8

Essential characteristic	**Performance**
Characteristic resistance under static and quasi-static shear loading	
- Resistance to steel failure of channel bolt under shear loading without lever arm	$V_{Rk,s}$ see Annex C19 and C20
- Resistance to steel failure by bending of the channel bolt under shear load with lever arm	$M^0_{Rk,s}$ see Annex C19 and C20
- Resistance to steel failure of channel lips, steel failure of connection between anchor and channel and steel failure of anchor (shear load in transverse direction)	$V^0_{Rk,s,l,y}$; $s_{l,V}$; $V_{Rk,s,c,y}$; $V_{Rk,s,a,y}$ see Annex C13 to C16
- Resistance to steel failure of connection between channel lips and channel bolt (shear load in longitudinal channel axis)	$V_{Rk,s,l,x}$ see Annex C13, C15 and C16
- Factor for sensitivity to installation (longitudinal shear)	γ_{inst} see Annex C13, C15 and C16
- Resistance to steel failure of the anchor (longitudinal shear)	$V_{Rk,s,a,x}$ see Annex C13, C15 and C16
- Resistance to steel failure of connection between anchor and channel (longitudinal shear)	$V_{Rk,s,c,x}$ see Annex C13, C15 and C16
- Resistance to concrete pry-out failure	k_8 see Annex C17 and C18
- Resistance to concrete edge failure	$k_{cr,V}$; $k_{ucr,V}$ see Annex C17 and C18
Characteristic resistance under combined static and quasi-static tension and shear loading	
- Resistance to steel failure of the anchor channel	k_{13} ; k_{14} see Annex C22
Characteristic resistance under fatigue tension loading	
- Fatigue resistance to steel failure of the whole system (continuous or tri-linear function, assessment method A1, A2)	$\Delta N_{Rk,s,0,n}$ (n = 1 to n = ∞) see Annex C23
- Fatigue limit resistance to steel failure of the whole system (assessment method B)	$\Delta N_{Rk,s,0,\infty}$ see Annex C23
- Fatigue resistance to steel failure of the whole system (linearized function, assessment method C)	$\Delta N_{Rk,s,lo,n}$; $N_{lok,s,n}$ (n = 10^4 to n = ∞) see Annex C25
- Fatigue resistance to concrete related failure (exponential function, assessment method A1, A2)	$\Delta N_{Rk,c,0,n}$; $\Delta N_{Rk,p,0,n}$ (n = 1 to n = ∞) see Annex C23
- Fatigue limit resistance to concrete related failure (assessment method B)	$\Delta N_{Rk,c,0,\infty}$; $\Delta N_{Rk,p,0,\infty}$ see Annex C23
- Fatigue resistance to concrete related failure (linearized function, assessment method C)	$\Delta N_{Rk,c,E,n}$; $\Delta N_{Rk,p,E,n}$ (n = 10^4 to n = ∞) see Annex C25

Essential characteristic	**Performance**
Characteristic resistance under fatigue shear loading	
- Fatigue resistance to steel failure of the whole system under shear load perpendicular to the longitudinal channel axis (bilinear function, assessment method C)	$\Delta V_{Rk,s,y,lo,n}$; $V_{lok,s,y,n}$ (n = 10^4 to n = ∞) see Annex C26
- Fatigue resistance to steel failure of the whole system under shear load in the direction of the longitudinal channel axis (bilinear function, assessment method C)	$\Delta V_{Rk,s,x,lo,n}$; $V_{lok,s,x,n}$ (n = 10^4 to n = ∞) see Annex C26
- Fatigue resistance to concrete pry-out failure perpendicular to the longitudinal channel axis and in the direction of the longitudinal (bilinear function, assessment method C)	$\Delta V_{Rk,cp,y,E,n}$; $\Delta V_{Rk,cp,x,E,n}$ (n = 10^4 to n = ∞) see Annex C26
Characteristic resistance under combined fatigue tension and shear loading	
- Fatigue resistance to steel failure of the whole system	k_{sn} see Annex C27
Characteristic resistance under seismic loading (seismic performance category C1)	
- Resistance to steel failure under seismic tension loading (seismic performance category C1)	$N_{Rk,s,a.eq}$; $N_{Rk,s,c.eq}$; $N^0{}_{Rk,s,l.eq}$; $N_{Rk,s.eq}$; $M_{Rk,s,flex.eq}$ see Annex C29 to C34
- Resistance to steel failure under seismic shear loading for shear load in transverse direction (seismic performance category C1)	$V_{Rk,s.eq}$; $V^0{}_{Rk,s,l,y.eq}$; $V_{Rk,s,c,y.eq}$; $V_{Rk,s,a,y.eq}$ see Annex C35 to C39
- Resistance to steel failure under seismic shear loading for shear load in longitudinal channel axis (seismic performance category C1)	$V_{Rk,s,l,x.eq}$; $V_{Rk,s,a,x.eq}$; $V_{Rk,s,c,x.eq}$ see Annex C35 to C37
Characteristic resistance under static and quasi-static tension and/or shear loading	
- Displacements	δ_{N0} ; $\delta_{N\infty}$ see Annex C12 $\delta_{V,y,0}$; $\delta_{V,y,\infty}$; $\delta_{V,x,0}$; $\delta_{V,x,\infty}$ see Annex C21 and C22

3.2 Safety in case of fire (BWR 2)

Essential characteristic	**Performance**
Reaction to fire	Class A1
Resistance to fire	See Annex C40 to C42

3.3 Other essential characteristics

Essential characteristic	**Performance**
Durability	See Annex B1

4 Assessment and verification of constancy of performance (AVCP) system applied, with reference to its legal base

In accordance with EAD No. 330008-04-0601-v01, the applicable European legal act is: [2000/273/EC].

The system to be applied is: 1

5 Technical details necessary for the implementation of the AVCP system, as provided for in the applicable EAD

Technical details necessary for the implementation of the AVCP system are laid down in the control plan deposited with Deutsches Institut für Bautechnik.

Issued in Berlin on 18 June 2024 by Deutsches Institut für Bautechnik

Dipl.-Ing. Beatrix Wittstock
Head of Section

beglaubigt:
Müller

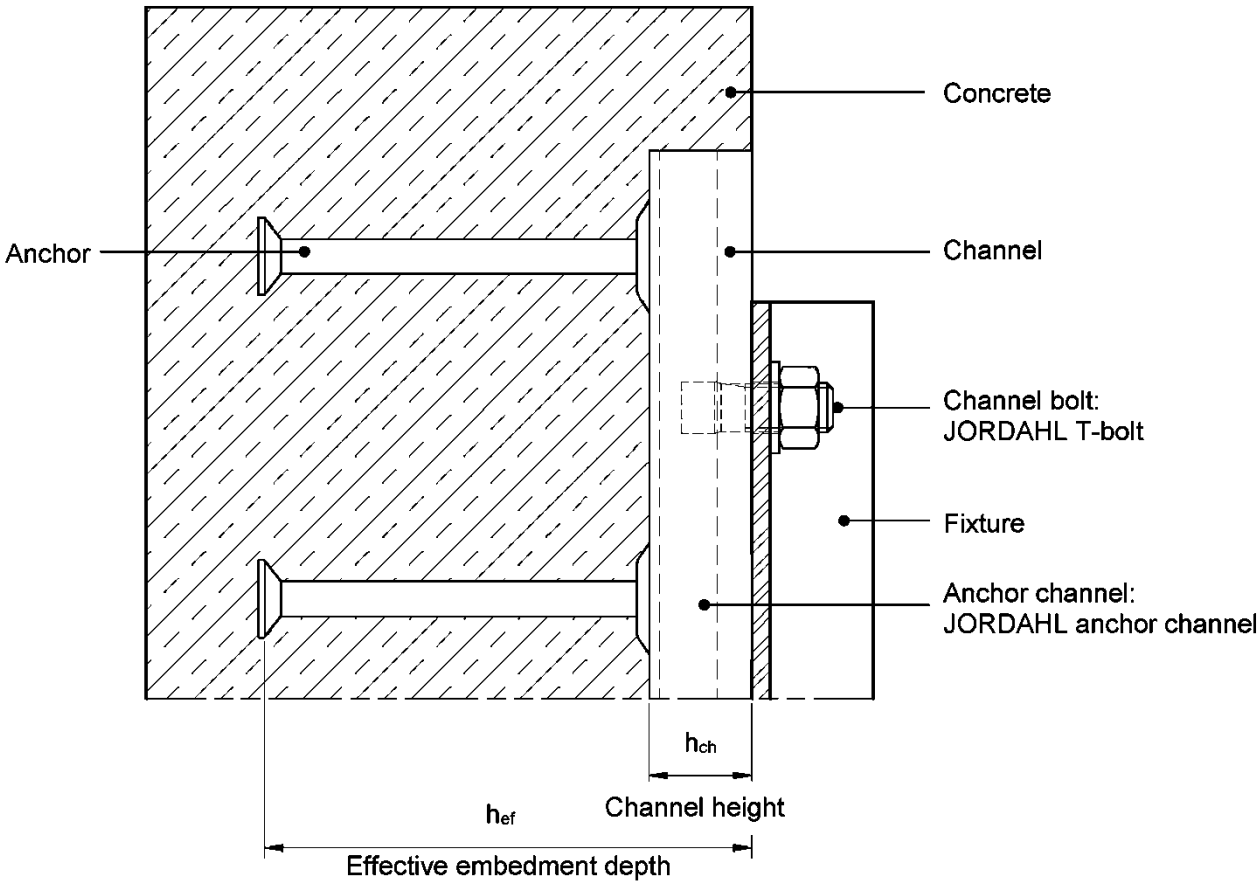

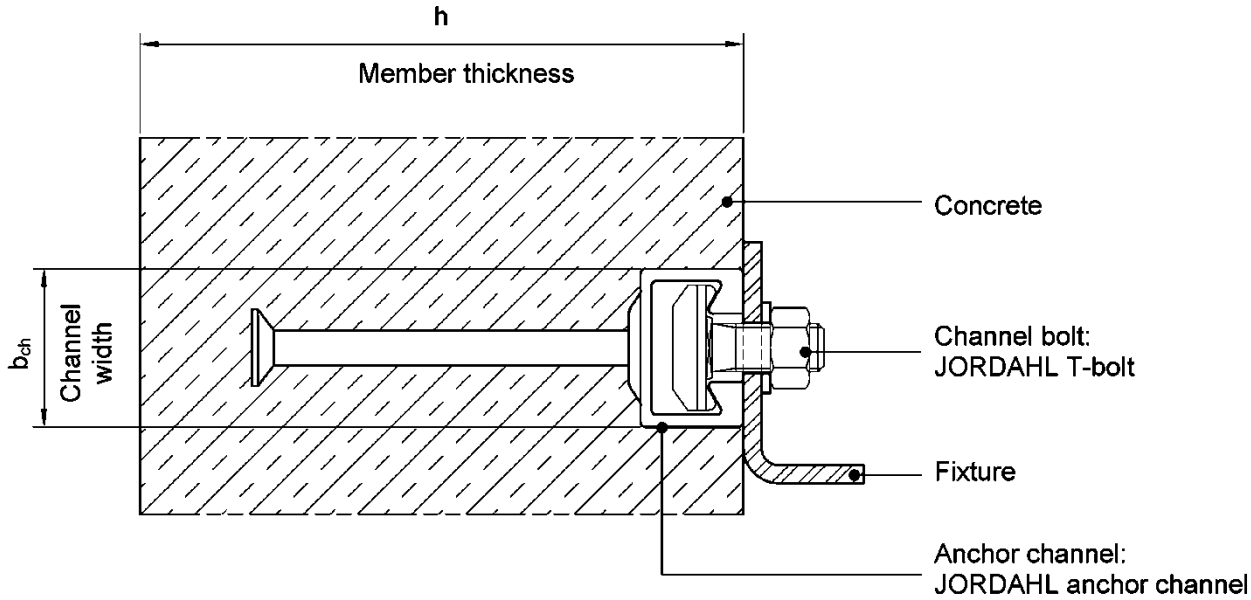

JORDAHL anchor channel JTA, JZA, JXA, and JXA-PC	**Annex A1**
Product description Installed condition	

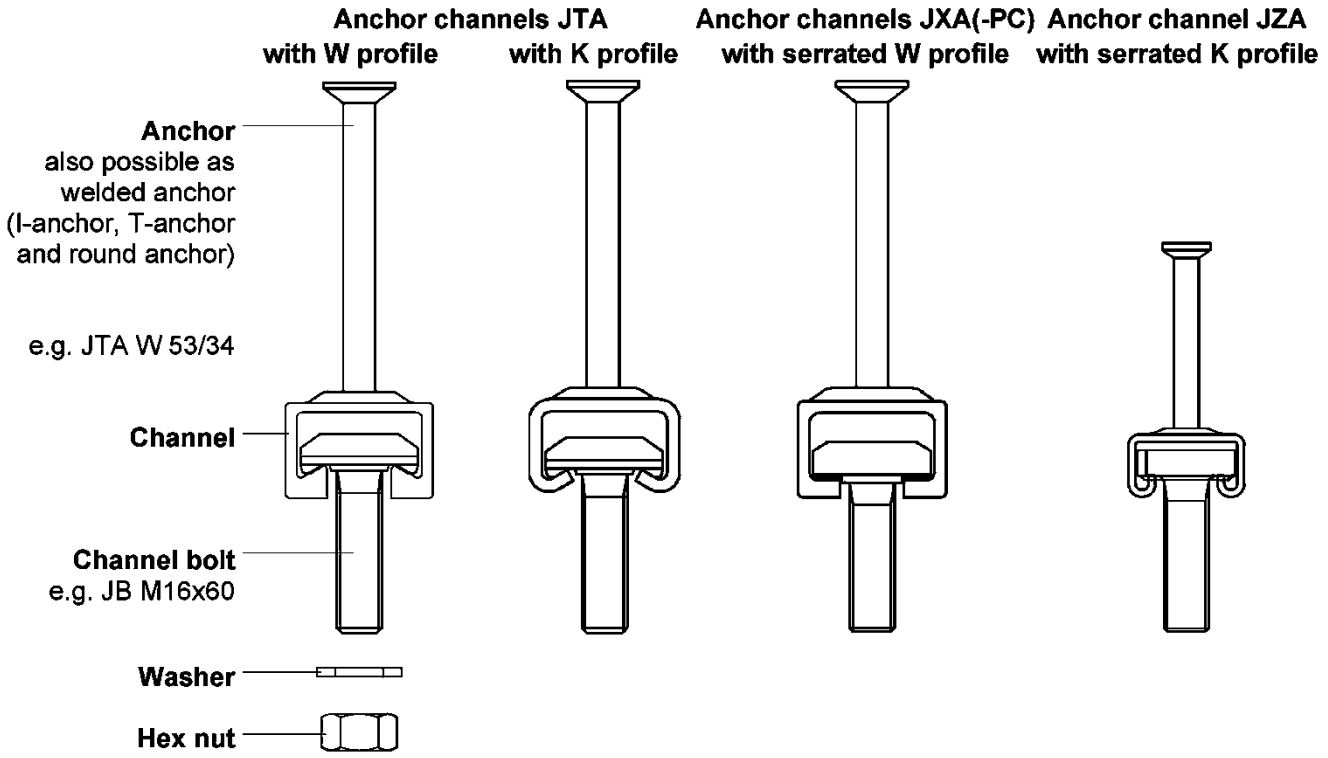

Example of marking of the JORDAHL anchor channels: e.g. JXA W53/34 A4

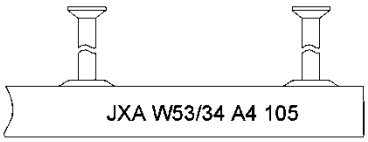

J or JORDAHL	= Identifying mark of the manufacturer
JXA W	= Anchor channel type
53/34	= Size
A4	= Material
105	= Embedment depth if $h_{ef} > h_{ef,min}$

Material channels:

Carbon steel

No marking	= Hot-dip galvanized

Stainless steel

A2	= CRC II [1)]
A4, L4	= CRC III [1)]
F4, FA	= CRC III [1)]
HCR	= CRC IV, V [1)]

[1)] Corrosion resistance class

Close to the anchors a nail hole is positioned

Example of marking of the JORDAHL T-bolt: e.g. JB A4-70

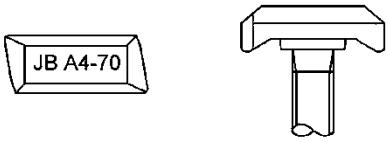

J or JORDAHL	= Identifying mark of the manufacturer
JB	= Channel bolt type
A4	= Material
70	= Strength grade

Material bolts:

Carbon steel

No marking	= Hot-dip galvanized
G	= Electroplated

Stainless steel

A2	= CRCII [1)]
A4, L4	= CRCIII [1)]
F4, FA	= CRC III [1)]
HCR	= CRC IV, V [1)]

Strength grade bolts:

Carbon steel

4.6, 8.8	Strength grade 4.6, 8.8

Stainless steel

50, 70	Strength grade 50, 70

JORDAHL anchor channel JTA, JZA, JXA, and JXA-PC

Product description
Marking and materials

Annex A2

Table A1: Materials and intended use

Item no.	Specification	Intended use	
		1	2
		Anchor channels may only be used in structures subject to dry internal conditions	Anchor channels may also be used in structures subject to internal conditions with usual humidity
		Materials	
1	Channel profile	Carbon steel hot-dip galvanized ≥ 55 µm [4]	Carbon steel hot-dip galvanized ≥ 55 µm [4] Stainless steel [5] CRC II
2	Anchor	Carbon steel hot-dip galvanized ≥ 55 µm [4]	Carbon steel hot-dip galvanized ≥ 55 µm [4] Stainless steel [5] CRC II
3	Channel bolt	Carbon steel strength grade 4.6, 8.8 [6] electroplated ≥ 5 µm [2]	Carbon steel strength grade 4.6, 8.8 [6] hot-dip galvanized ≥ 50 µm [3] Stainless steel [5] CRC II strength grade 50, 70 [9]
4	Washer	Carbon steel product class A [7] hardness class 200 HV [7] electroplated ≥ 5 µm [2]	Carbon steel hot-dip galvanized ≥ 50 µm [3] Stainless steel [5] steel type A2, A3, A4 [9]
5	Hexagonal nut	Carbon steel strength grade 5, 8 [8] electroplated ≥ 5 µm [2]	Carbon steel strength grade 5, 8 [8] hot-dip galvanized ≥ 50 µm [3] Stainless steel [5] steel type A2, A3, A4 [9] strength grade 70, 80 [9]

[1] Carbon steel only for welded anchors, with sufficient concrete cover according to EN 1992-1-1:2004 + AC:2010
[2] Electroplated according to EN ISO 4042:2018
[3] Hot-dip galvanized according to EN ISO 10684:2004 + AC:2009
[4] Hot-dip galvanized on the basis of EN ISO 1461:2022, but coating thickness ≥ 55 µm
[5] Stainless steel anchors only in combination with stainless steel channels, bolts, washers and nuts
[6] According to EN ISO 898-1:2013 + AC:2013
[7] According to EN ISO 7089:2000 and EN ISO 7093-1:2000, not included in delivery
[8] According to EN ISO 4032:2023
[9] According to EN ISO 3506-1:2020

JORDAHL anchor channel JTA, JZA, JXA, and JXA-PC

Product description
Materials and intended use

Annex A3

Table A1 (continuation): Materials and intended use

Item no.	Specification	Intended use		
		3	4	5
		For CRC III according to EN 1993-1-4:2006	Für CRC IV gemäß EN 1993-1-4:2006	Für CRC V gemäß EN 1993-1-4:2006
		Materials		
1	Channel profile	Stainless steel CRC III	Stainless steel CRC IV	Stainless steel CRC V
2	Anchor	Stainless steel CRC III Carbon steel [1]	Stainless steel CRC IV	Stainless steel CRC V
3	Channel bolt	Stainless steel CRC III strength grade 50, 70 [9]	Stainless steel CRC IV strength grade 50, 70 [9]	Stainless steel CRC V strength grade 50, 70 [9]
4	Washer	Stainless steel CRC III steel type A4 [9]	Stainless steel CRC IV steel type A5 [9]	Stainless steel CRC V steel type A8 [9]
5	Hexagonal nut	Stainless steel CRC III steel type A4 [9] strength grade 70, 80 [6]	Stainless steel CRC IV steel type A5 [9] strength grade 70, 80 [6]	Stainless steel CRC V steel type A8 [9] strength grade 70, 80 [6]

[1] Carbon steel only for welded anchors, with sufficient concrete cover according to EN 1992-1-1:2004 + AC:2010
[2] Electroplated according to EN ISO 4042:2018
[3] Hot-dip galvanized according to EN ISO 10684:2004 + AC:2009
[4] Hot-dip galvanized on the basis of EN ISO 1461:2022, but coating thickness ≥ 55 µm
[5] Stainless steel anchors only in combination with stainless steel channels, bolts, washers and nuts
[6] According to EN ISO 898-1:2013+ AC:2013
[7] According to EN ISO 7089:2000 and EN ISO 7093-1:2000, not included in delivery
[8] According to EN ISO 4032:2023
[9] According to EN ISO 3506-1:2020

Anchor channels JTA with W profile | **with K profile** | **Anchor channel JXA(-PC) with serrated W profile** | **Anchor channel JZA with serrated K profile**

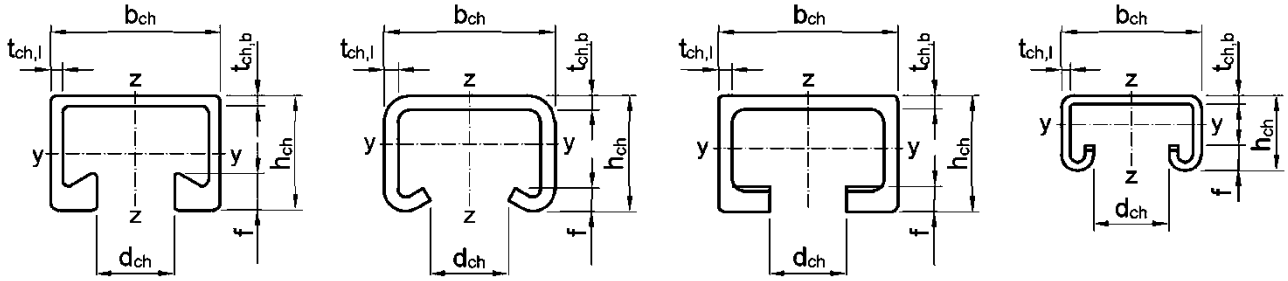

Fig. 1 **Fig. 2** **Fig. 3** **Fig. 4**

Table A2: Dimensions of profile – carbon steel

Anchor channel		Fig.	Material	Dimension [mm]						[mm⁴]
				b_{ch}	h_{ch}	$t_{ch,b}$	$t_{ch,l}$	d_{ch}	f	I_y
JTA	W40/22 W40+	1	Carbon steel	39,50	23,00	2,60	2,40	18,00	6,00	20.029
	W50/30 W50+	1		49,00	30,00	3,20	2,75	22,50	7,85	52.896
	W53/34	1		52,50	33,50	4,10	4,00	22,50	10,50	93.262
	W55/42	1		54,50	42,00	5,00	5,00	26,00	12,90	187.464
	W72/48	1		72,00	48,50	4,50	5,00	33,00	15,50	349.721
	K28/15	2		28,00	15,25	2,25	2,25	12,00	2,25	4.060
	K38/17	2		38,00	17,50	3,00	3,00	18,00	3,00	8.547
	K40/25	2		40,00	25,00	2,75	2,75	18,00	5,60	20.570
	K50/30	2		50,00	30,00	3,00	3,00	22,00	7,39	41.827
	K53/34	2		53,50	33,00	4,50	4,50	22,00	7,90	72.079
	K72/48	2		72,00	49,00	6,00	6,00	33,00	9,90	293.579
JZA	K41/22	4		41,00	22,50	2,50	2,50	22,0	8,00	15.000
JXA	W29/20	3		29,00	20,00	2,50	3,50	14,00	5,00	10.200
	W38/23	3		38,00	23,00	3,50	3,00	18,00	5,50	20.953
	W53/34	3		52,50	34,00	4,00	4,00	22,50	7,50	92.910
	W64/44	3		64,00	44,00	4,50	5,00	26,00	10,00	241.800
JXA-PC	W53/34	3		52,50	34,00	4,00	4,00	22,50	7,50	92.910

JORDAHL anchor channel JTA, JZA, JXA, and JXA-PC

Product description
Types of channels – carbon steel

Annex A5

Table A3: Dimensions of profile – stainless steel

Anchor channel		Fig.[1]	Material	Dimension [mm]						[mm⁴]
				b_{ch}	h_{ch}	$t_{ch,b}$	$t_{ch,l}$	d_{ch}	f	I_y
JTA	W40/22 W40+	1	Stainless steel	39,50	23,00	2,60	2,40	18,00	6,00	20.029
	W50/30 W50+	1		49,00	30,00	3,20	2,75	22,50	7,85	52.896
	W53/34	1		52,50	33,50	4,10	4,00	22,50	10,50	93.262
	W55/42[2]	1		–	–	–	–	–	–	–
	W72/48	1		72,00	48,50	4,50	5,00	33,00	15,50	349.721
	K28/15	2		28,00	15,25	2,25	2,25	12,00	2,25	4.060
	K38/17	2		38,00	17,50	3,00	3,00	18,00	3,00	8.547
	K40/25	2		39,50	25,00	2,50	2,50	18,00	5,40	19.097
	K50/30	2		50,00	30,00	3,00	3,00	22,00	7,39	41.827
	K53/34	2		53,50	33,00	4,50	4,50	22,00	7,90	72.079
	K72/48	2		72,00	49,00	6,00	6,00	33,00	9,90	293.579
JZA	K41/22	4		41,00	22,50	2,5	2,50	22,00	6,50	15.000
JXA	W29/20[2]	3		–	–	–	–	–	–	–
	W38/23	3		38,00	23,00	3,50	3,00	18,00	5,50	20.953
	W53/34	3		52,50	34,00	4,00	4,00	22,50	7,50	92.910
	W64/44[2]	3		–	–	–	–	–	–	–
JXA-PC	W53/34[2]	3		–	–	–	–	–	–	–

[1] Fig. according to Annex A5
[2] Product not available

JORDAHL anchor channel JTA, JZA, JXA, and JXA-PC

Product description
Types of channels – stainless steel

Annex A6

Round anchor

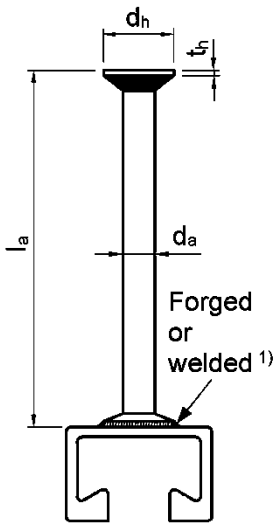

1) Only anchor channel JTA and JXA-PC: welded anchors

Table A4: Dimensions of round anchors

Anchor channel		Type	d_a [mm]	d_h [mm]	t_h [mm]	A_h [mm²]	$l_{a,min}$ [mm]	Material: Carbon steel	Material: Stainless steel
JTA	K28/15	R	7,0	12,0	2,0	75	31,8	✓	✓
	W40/22, K40/25		8,5	15,0	2,0	120	56,0	✓	✓
	W40+						70,0	–	✓
	K38/17		9,0	17,0	3,0	163	61,5	✓	✓
	W40/22, K40/25						57,0	✓	✓
	W50/30, K50/30		9,0	17,5	3,0	176	67,0	✓	✓
	W50+		10,0	19,5	3,0	220	79,0	✓	✓
	W40+		10,8	19,0	3,0	191	71,0	✓	–
	W50/30, K50/30						67,0	✓	–
	W53/34, K53/34		11,5	23,5	3,0	330	124,5	✓	✓
	W55/42		15,5	28,0	3,5	427	136,5	✓	–
	W72/48, K72/48		15,5	31,0	3,5	566	133,5	✓	✓
JZA	K41/22		9,0	17,0	3,0	163	55,5	✓	✓
JXA	W29/20		9,0	17,0	3,0	163	61,0	✓	–
	W38/23		10,0	19,5	3,0	220	75,0	✓	✓
	W53/34		11,5	23,5	3,0	330	124,5	✓	✓
JXA-PC	W53/34		14,0	42,0	2,8	1385	145,0	✓	–

JORDAHL anchor channel JTA, JZA, JXA, and JXA-PC

Product description
Types of anchors – round anchors

Annex A7

I-anchor **T-anchor**

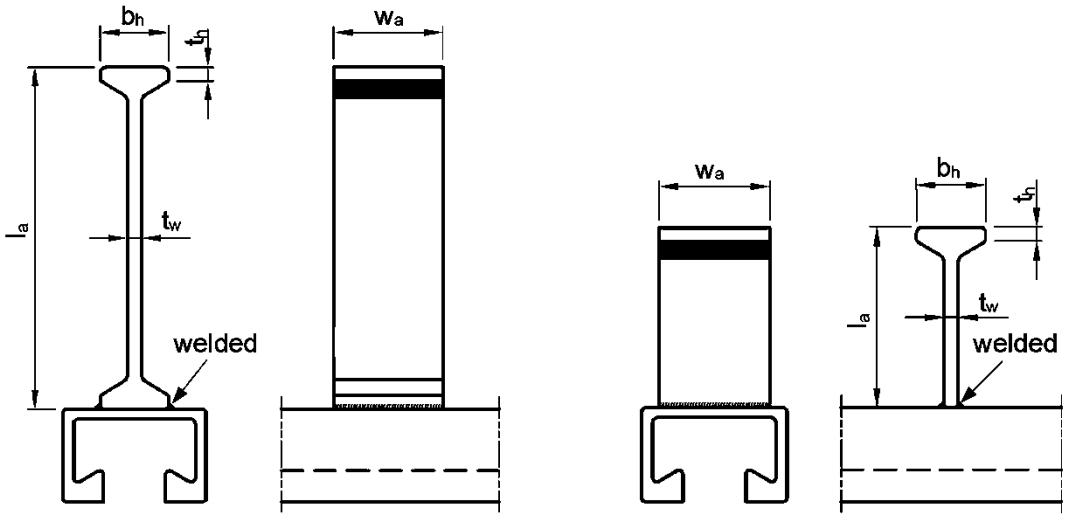

Available configurations (anchor type, orientation of anchor and welding): refer to Annex A9, A10 and A11

Table A5: Dimensions of I-anchors and T-anchors

Anchor channel		Type	w_a [mm]	b_h [mm]	t_w [mm]	t_h [mm]	A_h [mm²]	$l_{a,min}$ [mm]	Material: Carbon steel	Material: Stainless steel
JTA	K28/15, K38/17	I 60	10	18,0	5,0	3,3	130	62	✓	✓
	K40/25		12				234	62	✓	✓
	W40/22		20				260	62	✓	✓
	W40/22	T 60	20				260	38	✓	✓
	K50/30	I 69	18	18,0	5,0	3,5	234	69	✓	✓
	W50/30		25				325	69	✓	✓
	W50/30	T 69	25				325	45	✓	✓
	W40+	I 128	25	17,0	6,0	5,0	275	128	✓	–
	W50+		30				330	128	✓	–
	K53/34		26				286	128	✓	–
	W53/34		40				440	128	✓	–
	W53/34	T 128	40				440	48	✓	–
	W55/42	I 140	45	20,0	7,1	6,0	581	140	✓	–
	W72/48, K72/48		40				516	140	✓	–
	W55/42	T 140	45				581	48	✓	–
JXA	W38/23	I 128	20	17,0	6,0	5,0	220	128	✓	–
	W53/34		40				440	128	✓	–
	W38/23	T 128	20				220	36	✓	–
	W53/34		40				440	47	✓	–
	W64/44	I 140	45	20,0	7,1	5,0	581	140	✓	–

JORDAHL anchor channel JTA, JZA, JXA, and JXA-PC

Product description
Types of anchors – I-anchors and T-anchors

Annex A8

Table A6: Overview anchor and channel bolt types

Anchor channel		Anchor type					Channel bolt type		
		Round anchor	I-anchor		T- anchor		Smooth channel bolt	Double notching bolt	Serrated bolt
			Anchor position	Weld seam position	Anchor position	Weld seam position			
JTA	W40/22	✓	transversal/ longitudinal	transversal/ longitudinal	transversal	transversal	✓	✓	–
	W40+	✓	transversal/ longitudinal	transversal/ longitudinal	–	–	✓	✓	–
	W50/30	✓	transversal/ longitudinal	transversal/ longitudinal	transversal	transversal	✓	✓	–
	W50+	✓	transversal/ longitudinal	transversal/ longitudinal	–	–	✓	✓	–
	W53/34	✓	transversal/ longitudinal	transversal/ longitudinal	transversal	transversal	✓	✓	–
	W55/42	✓	transversal/ longitudinal	transversal/ longitudinal	transversal	transversal	✓	–	–
	W72/48	✓	transversal/ longitudinal	transversal/ longitudinal	–	–	✓	–	–
	K28/15	✓	transversal/ longitudinal	transversal/ longitudinal	–	–	✓	–	–
	K38/17	✓	transversal/ longitudinal	transversal/ longitudinal	–	–	✓	–	–
	K40/25	✓	transversal/ longitudinal	transversal/ longitudinal	–	–	✓	–	–
	K50/30	✓	transversal/ longitudinal	transversal/ longitudinal	–	–	✓	–	–
	K53/34	✓	transversal/ longitudinal	transversal/ longitudinal	–	–	✓	–	–
	K72/48	✓	transversal/ longitudinal	transversal/ longitudinal	–	–	✓	–	–
JZA	K41/22	✓	–	–	–	–	–	–	✓
JXA	W29/20	✓	–	–	–	–	–	–	✓
	W38/23	✓	transversal	transversal	transversal	transversal	–	–	✓
	W53/34	✓	transversal	transversal	transversal	transversal	–	–	✓
	W64/44	–	transversal	longitudinal	–	–	–	–	✓
JXA-PC	W53/34	✓	–	–	–	–	–	–	✓

JORDAHL anchor channel JTA, JZA, JXA, and JXA-PC

Product description
Overview anchor and channel bolt types

Annex A9

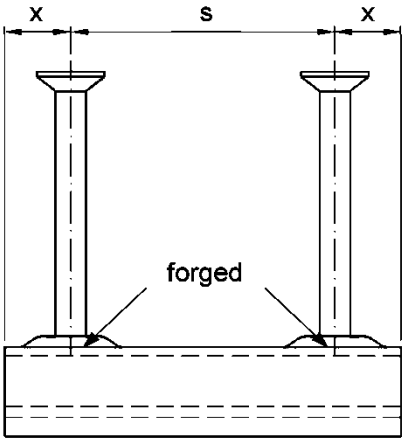

Fig. 1
Round anchor
forged

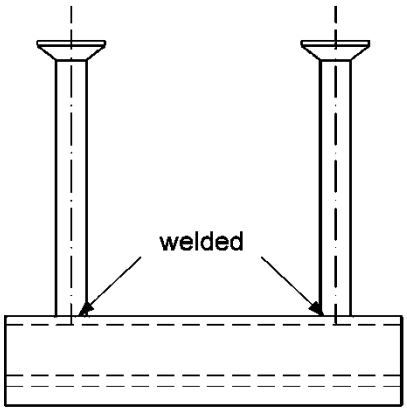

Fig. 2
Round anchor
welded

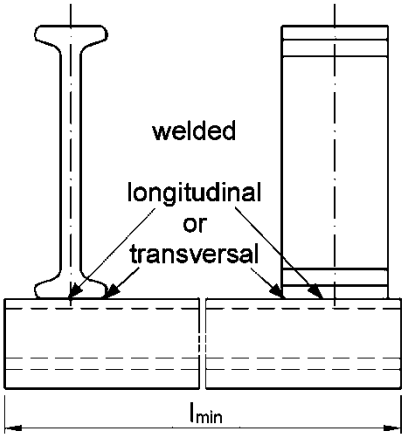

Fig. 3
I-anchor
welded

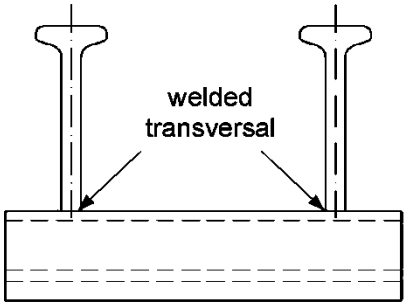

Fig. 4
T-anchor
welded

Table A7: Anchor positioning (JTA W and JTA K)

Anchor channel		Anchor spacing		End spacing	Min. channel length	Configuration according to Fig.
		s_{min}	s_{max}	x	l_{min}	
		[mm]		[mm]	[mm]	
JTA	K28/15 K38/17	50	200	25	100	1, 2, 3
	K40/25 K50/30 W40+ W50+	50	250	25[1)]	100	1, 2, 3
	W40/22 W50/30	50	250	25[1)]	100	1, 2, 3, 4
	K53/34	80	250	35	150	1, 2, 3[2)]
	W53/34	80	250	35	150	1, 2, 3[2)], 4[2)]
	W55/42	80	300	35	150	1, 2, 3[2)], 4[2)]
	K72/48 W72/48	80	400	35	150	1, 2, 3[2)]

[1)] End spacing may be increased to 35 mm
[2)] Only carbon steel anchor available

JORDAHL anchor channel JTA, JZA, JXA, and JXA-PC

Product description
Anchor positioning and channel length (JTA)

Annex A10

Fig. 1
Round anchor
forged

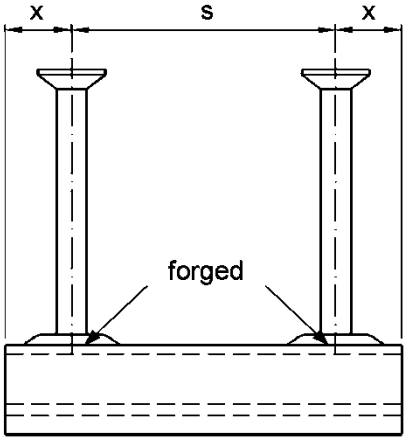

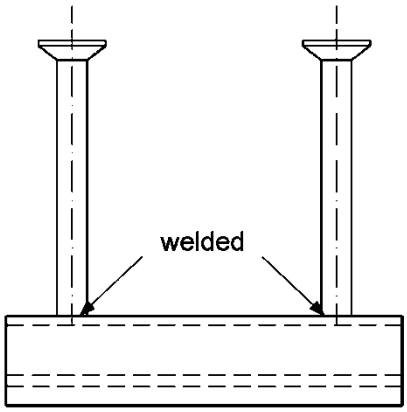

Fig. 2
Round anchor
welded

Fig. 3
I-anchor
welded

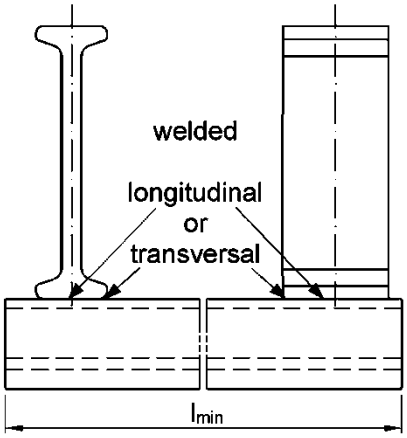

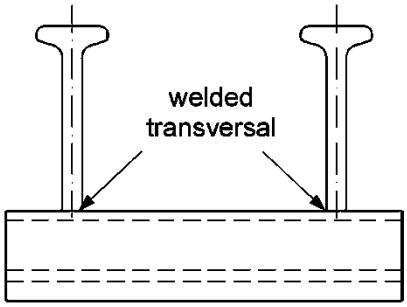

Fig. 4
T-anchor
welded

Table A8: Anchor positioning (JZA, JXA, and JXA-PC)

Anchor channel		Anchor spacing		End spacing	Min. channel length	Configuration according to Fig.
		s_{min}	s_{max}	x	l_{min}	
		[mm]		[mm]	[mm]	
JZA	K41/22	50	250	25	100	1
JXA	W29/22	50	200	25	100	1
	W38/23	50	250	25	100	1, 3[1) 2)], 4[1)]
	W53/34	80	250	35	150	1, 3[1) 2)], 4[1)]
	W64/44	80	250	35	150	3[3)]
JXA-PC	W53/34	80	250	35	150	2

[1)] Only carbon steel anchor available
[2)] Only welded transversal
[3)] Only welded longitudinal

JORDAHL anchor channel JTA, JZA, JXA, and JXA-PC

Product description
Anchor positioning and channel length (JZA, JXA)

Annex A11

Table A9: Dimensions of channel bolts for JTA anchor channels

Anchor channel		Fig.	Channel bolt	Dimension [mm]			
				$b_{cbo,1}$	$b_{cbo,2}$	t_{cbo}	d
JTA	K28/15	1	JD	11,2	22,4	4,5	6
						4,5	8
						5,0	10
						6,5	12
	K38/17	1	JH	16,5	30,5	6,0	10
						7,0	12
						8,0	16
	K40/25 W40/22 W40+	2	JC	14,0	32,0	8,0	10
						8,0	12
				17,0		11,0	16
	W40/22 W40+	3	JKC	16,8	32,7	8,0	12
						8,0	16
	K50/30 W50/30 W50+ K53/34 W53/34 W55/42	2	JB	17,0	41,5	9,0	10
						10,0	12
				17,5		13,0	16
				20,5		14,5	20
	W50/30 W50+ W53/34	3	JKB	17,0	41,5	12,0	16
				20,5		13,5	20
	W55/42	2	JB	24,5	41,5	18,5	24
	K72/48 W72/48	2	JA	25,0	58,0	14,0	20
				25,0		20,0	24
				28,0		20,0	27
				31,0		20,0	30

Hammerhead channel bolts JD, JH

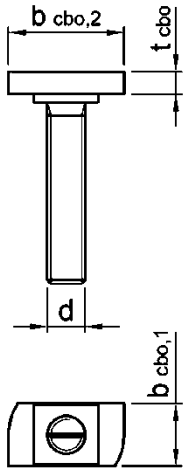

Fig. 1

Hooked channel bolts JA, JB, JC

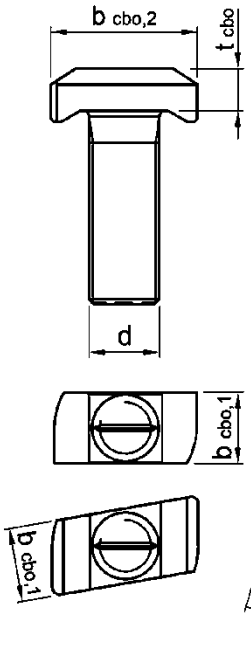

Double notching channel bolts JKB, JKC

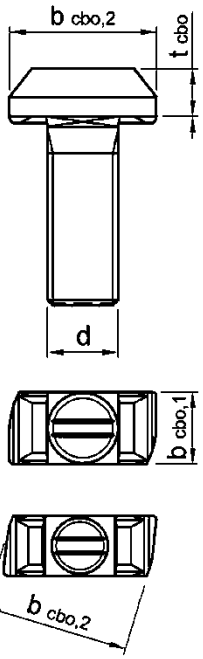

Fig. 2 **Fig. 3**

Grooves for marking the position

JORDAHL anchor channel JTA, JZA, JXA, and JXA-PC

Product description
Types of channel bolts – geometry

Annex A12

Table A10: Dimensions of channel bolts for JZA, JXA, and JXA-PC anchor channels

Anchor channel		Fig.	Channel bolt	Dimension [mm]			
				$b_{cbo,1}$	$b_{cbo,2}$	t_{cbo}	d
JZA	K41/22	2	JZS	19,5	34,5	9,0	12
						9,0 [1]	16
JXA	W29/20	1	JXD	13,5	22,0	6,5	10
						6,5	12
	W38/23	1	JXH	17,2	28,9	8,0	12
						8,0	16
	W64/44	1	JXE	24,7	51,0	14,0	20
						16,0	24
JXA JXA-PC	W53/34	1	JXB	21,0	41,6	11,5	16
						13,0	20

[1] Value for carbon steel; stainless steel 7,0

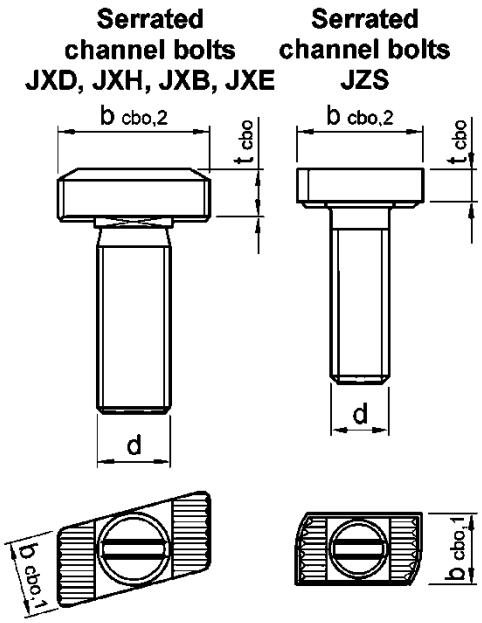

Fig. 1 **Fig. 2**

Grooves for marking the position

Table A11: Strength grades of channel bolts

Channel bolt		Carbon steel [1]		Stainless steel [1]	
Strength grade [2]		4.6	8.8	50	70
f_{uk}	[N/mm²]	400	800	500	700
f_{yk}		240	640	210	450
Surface		electroplated, hot-dip galvanized		–	

[1] Materials according to Annex A3 to A4, Table A1
[2] Material properties according to EN ISO 898-1:2013 + AC:2013

JORDAHL anchor channel JTA, JZA, JXA, and JXA-PC

Product description
Types of channel bolts – geometry and material

Annex A13

Table A12: Overview strength grades of channel bolts for JTA, JZA, JXA, and JXA-PC anchor channels

Channel bolt	Strength grade [1]			
	4.6	8.8	50	70
JD	✓	– [2]	✓	✓
JH	✓	✓	✓	– [2]
JC	✓	✓	✓	✓
JKC	– [2]	✓	– [2]	✓
JB	✓	✓	✓	✓
JKB	– [2]	✓	– [2]	✓
JA	✓	✓	✓	– [2]
JZS	– [2]	✓	✓	– [2]
JXD	– [2]	✓	– [2]	– [2]
JXH	– [2]	✓	– [2]	✓
JXB	– [2]	✓	– [2]	✓
JXE	– [2]	✓	– [2]	– [2]

[1] Material properties according to EN ISO 898-1:2013 + AC:2013
[2] Product not available

Table A13: JORDAHL gap filler set JGF: Injection nut

Injection nut	Strength grade [1]		Dimension [mm]		Suitable for
	8	FA-70	H	D [2]	
M12	✓	✓	18	4	JXD
M16	✓	✓	24	4	JXH
M20	✓	✓	30	4	JXB
M24	✓	✓	36	4	JXE

[1] Material properties according to EN ISO 898-1:2013 + AC:2013
[2] Static mixer of injection mortar cartridge to be fitted with mixer reduction of the injection mortar system, outer diameter 4 mm

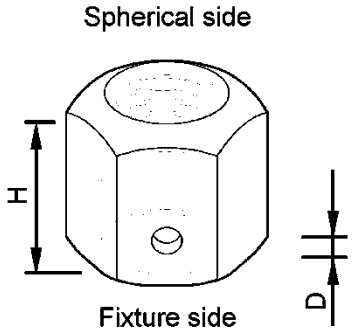

Fig. 1

Table A14: JORDAHL gap filler set JGF: Injection insert

Injection insert	Dimension [mm]			Suitable for
	d_{ch} [1]	a	b	
M10/M12	14.0	21	37	JXA W29/22
M12/M16	18.0	25	41	JXA W38/23
M16/M20	22.5	29	45	JXA W53/34
M20/M24	28.0	33	49	JXA W64/44

[1] Width of channel slot, refer to Table A2

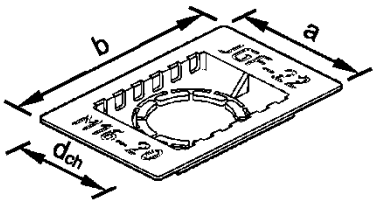

Fig. 2

JORDAHL anchor channel JTA, JZA, JXA, and JXA-PC

Product description
Types of channel bolts – strength grade and gap filler set

Annex A14

Specifications of intended use

Anchor channels and channel bolts subject to:

- Static and quasi-static tension und shear perpendicular to the longitudinal axis of the channel.
- Static and quasi-static shear in the direction of the longitudinal axis of the channel (anchor channels JTA with notching channel bolts JKB and JKC, anchor channels JZA with channel bolts JZS, anchor channels JXA with channel bolts JXD, JXH and JXE, as well as anchor channels JXA and JXA-PC with channel bolts JXB).
- Fatigue cyclic tension, fatigue cyclic shear perpendicular to the longitudinal axis of the channel, and fatigue cyclic shear in the direction of the longitudinal axis of the channel and combination thereof (anchor channels with channel bolts for assessment method A1, A2 and B according to Annex C23 and anchor channels with channel bolts for assessment method C according to Annex C24 and C27).
- Seismic tension and seismic shear perpendicular to the longitudinal axis of the channel and seismic shear in the direction of the longitudinal axis of the channel (seismic performance category C1) (anchor channels JTA with notching channel bolts JKB and JKC, anchor channels JZA with channel bolts JZS and anchor channels JXA with channel bolts JXD, JXH and JXE, as well as anchor channels JXA and JXA-PC with channel bolts JXB according to Annex C28).
- Fire exposure for concrete strength class C20/25 to C50/60 for tension and shear perpendicular to the longitudinal axis of the channel (anchor channels and channel bolts according to Annex C41 to C43).

Base materials:

- Reinforced or unreinforced compacted normal weight concrete without fibres according to EN 206:2013+A2:2021.
- Concrete strength classes C12/15 to C90/105 according to EN 206:2013+A2:2021.
- Cracked or uncracked concrete.

Service conditions (environmental conditions):

- Structures subject to dry internal conditions (anchor channels and channel bolts according to Annex A3 and A4, Table A1, column 1 – 5).
- Structures subject to internal conditions with usual humidity (e.g. kitchen, bath and laundry in residential buildings, except permanently damp conditions and applications under water) (anchor channels and channel bolts according to Annex A3 and A4, Table A1, column 2 – 5).
- According to EN 1993-1-4:2006 + A1:2015 + A2:2020 relating to corrosion resistance class CRC III (anchor channels and channel bolts according to A4, Table A1, column 3 – 5).
- According to EN 1993-1-4:2006 + A1:2015 + A2:2020 relating to corrosion resistance class CRC IV (anchor channels and channel bolts according to A4, Table A1, column 4 – 5).
- According to EN 1993-1-4:2006 + A1:2015 + A2:2020 relating to corrosion resistance class CRC V (anchor channels and channel bolts according to A4, Table A1, column 5).

Design:

- Anchor channels are designed under the responsibility on an engineer experienced in anchorages and concrete work.
- Verifiable calculation notes and drawings are prepared taking account of the loads to be anchored. The position of the anchor channel and channel bolts are indicated on the design drawings (e.g. position of the anchor channel relative to the reinforcement or to supports).
- For static, quasi-static and seismic (seismic performance category C1) loading as well as fire exposure the anchor channels are designed in accordance with EN 1992-4:2018 and EOTA TR 047 "Design of Anchor Channels", May 2021.
- For fatigue loading the anchor channels are designed in accordance with EOTA TR 050 "Calculation Method for the Performance of Anchor Channels under Fatigue Cyclic Loading", June 2022.
- The characteristic resistances are calculated with the minimum effective embedment depth.

Installation:

- The installation of anchor channels is carried out by appropriately qualified personnel under the supervision of the person responsible for the technical matters on site.
- Use of the anchor channels only as supplied by the manufacturer – without any manipulations, repositioning or exchanging of channel components.
- Cutting of anchor channels is allowed only if pieces according to Annex A10, Table A7 and Annex A11, Table A8 are generated including end spacing and minimum channel length and only to be used in dry internal conditions (Annex A3 and A4, Table A1, column 1). For anchor channels made of stainless steel there are no restrictions regarding corrosion resistance when using cut channel pieces, if cutting is done professionally and contamination of cutting edges with corroding material is avoided.
- Installation in accordance with the installation instructions given in Annexes B8 and B9.
- The anchor channels are fixed on the formwork, reinforcement or auxiliary construction such that no movement of the channels will occur during the time of laying the reinforcement and of placing and compacting the concrete.
- The annular gap between channel bolt shaft and hole in the fixture as well as the gap between channel bolt head and lips of the anchor channel is properly filled with injection mortar according to Annex B10 (for seismic and fatigue with shear loads).
- The concrete under the head of the anchors is properly compacted. The channels are protected from penetration of concrete into the internal space of the channel.
- Washer may be chosen according to Annex A3 and Annex A4 and provided separately by the user.
- Orientating the channel bolt (groove according to Annex A12 and Annex A13) perpendicular to the channel axis.
- The required installation torques given in Annex B5 and B6 must be applied and must not be exceeded.

JORDAHL anchor channel JTA, JZA, JXA, and JXA-PC	**Annex B2**
Intended use Specifications	

Side view

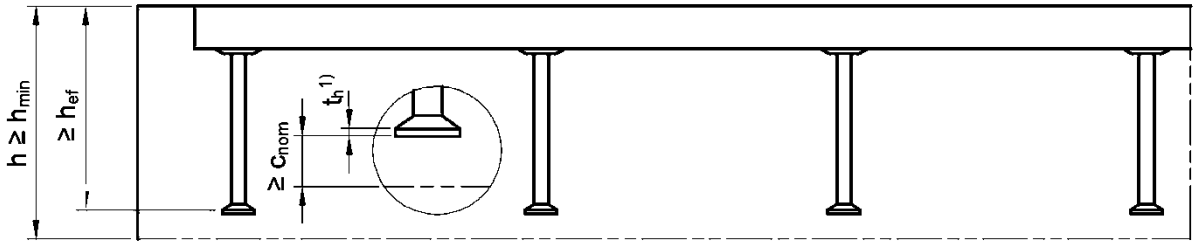

Plan view

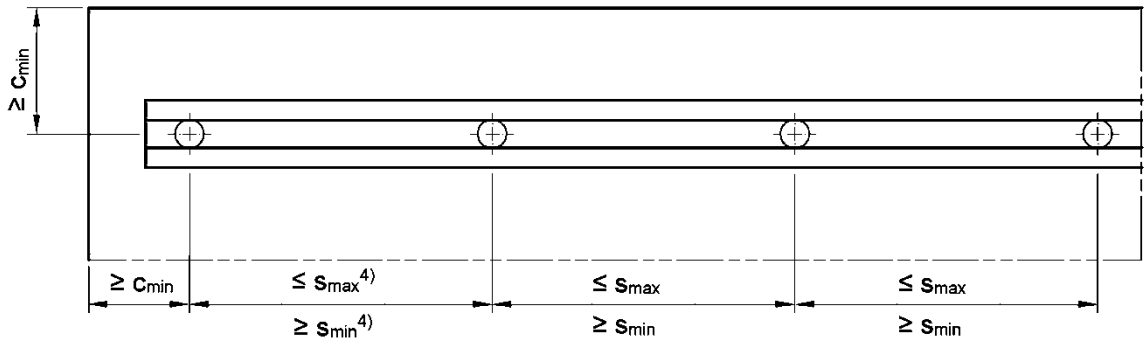

Table B1: Minimum effective embedment depth, edge distance and member thickness (JTA W)

Anchor channel			JTA						
			W40/22	W40+	W50/30	W50+	W53/34	W55/42	W72/48
Min. effective embedment depth round anchors and I-anchors	$h_{ef,min}$	[mm]	79	91	94	106	155	175	179
Min. effective embedment depth,T-anchors	$h_{ef,min}$	[mm]	57	– 3)	71	– 3)	76	84	– 3)
Min. edge distance round anchors and I-anchors	c_{min}	[mm]	50	50	50	50	100	100	150
Min. edge distance T-anchors	c_{min}	[mm]	50	– 3)	50	– 3)	75	75	– 3)
Min. member thickness round anchors and I-anchors	h_{min}	[mm]	90	102	118	125	170	191	195
Min. member thickness T-anchors	h_{min}	[mm]	95	– 3)	118	– 3)	110	130	– 3)
Min. member thickness in general	h_{min}	[mm]	$h_{ef} + t_h$ 1) + c_{nom} 2)						

1) t_h according to Annex A7, Table A4 and Annex A8, Table A5
2) c_{nom} according to EN 1992-1-1:2004 + AC:2010
3) Product not available
4) s_{min}, s_{max} according to Annex A10, Table A7 and Annex A11, Table A8

JORDAHL anchor channel JTA, JZA, JXA, and JXA-PC

Intended use
Installation parameters for anchor channels (JTA W)

Annex B3

Table B2: Minimum effective embedment depth, edge distance and member thickness (JTA K)

Anchor channel			JTA					
			K28/15	K38/17	K40/25	K50/30	K53/34	K72/48
Min. effective embedment depth round anchors and I-anchors	$h_{ef,min}$	[mm]	45	76	79	94	155	179
Min. edge distance round anchors and I-anchors	c_{min}	[mm]	40	50	50	75	100	150
Min. member thickness round anchors and I-anchors	h_{min}	[mm]	55	87	90	105	170	195
Min. member thickness in general	h_{min}	[mm]	$h_{ef} + t_h$ [1] $+ c_{nom}$ [2]					

[1] t_h according to Annex A7, Table A4 and Annex A8, Table A5
[2] c_{nom} according to EN 1992-1-1:2004 + AC:2010

Table B3: Minimum effective embedment depth, edge distance and member thickness (JZA, JXA, and JXA-PC)

Anchor channel			JZA	JXA				JXA-PC
			K41/22	W29/20	W38/23	W53/34	W64/44	W53/34
Min. effective embedment depth round anchors and I-anchors	$h_{ef,min}$	[mm]	75	78	95	155	179	180
Min. effective embedment depth T-anchors	$h_{ef,min}$	[mm]	– [3]	– [3]	54	76	– [3]	– [3]
Min. edge distance round anchors and I-anchors	c_{min}	[mm]	50	50	75	100	100	100
Min. edge distance T-anchors	c_{min}	[mm]	– [3]	– [3]	50	100	– [3]	– [3]
Min. member thickness round anchors and I-anchors	h_{min}	[mm]	120	120	120	190	210	190
Min. member thickness T-anchors	h_{min}	[mm]	– [3]	– [3]	100	110	– [3]	– [3]
Min. member thickness in general	h_{min}	[mm]	$h_{ef} + t_h$ [1] $+ c_{nom}$ [2]					

[1] t_h according to Annex A7, Table A4 and Annex A8, Table A5
[2] c_{nom} according to EN 1992-1-1:2004 + AC:2010
[3] Product not available

JORDAHL anchor channel JTA, JZA, JXA, and JXA-PC

Intended use
Installation parameters for anchor channels (JTA K, JZA and JXA)

Annex B4

Table B4: Minimum spacing and installation torque of channel bolts (for JTA)

Anchor channel		Channel bolt		Min. spacing of the channel bolt $s_{min,cbo}$	Installation torque T_{inst} [4]		
					General [2] $T_{inst,g}$	Steel-steel [3] $T_{inst,s}$	
		Type	d		Steel 4.6; 8.8 [1] Stainless steel 50; 70 [1]	Steel 4.6 [1] Stainless steel 50 [1]	Steel 8.8 [1] Stainless steel 70 [1]
			[mm]	[mm]	[Nm]		
JTA	K28/15	JD	6	30	3	3	8
			8	40	8	8	20
			10	50	13	15	40
			12	60	15	25	70
	K38/17	JH	10	50	15	15	40
			12	60	25	25	70
			16	80	40	65	180
	K40/25 W40/22 W40+	JC	10	50	15	15	40
			12	60	25	25	70
			16	80	45	65	180
	W40/22 W40+	JKC	12	– [5]	– [5]	– [5]	70
			16	– [5]	– [5]	– [5]	180
	K50/30 W50/30 W50+	JB	10	50	15	15	40
			12	60	25	25	70
			16	80	60	65	180
			20	100	75	130	360
	K53/34 W53/34	JB	10	50	15	15	40
			12	60	25	25	70
			16	80	60	65	180
			20	100	120	130	360
	W50/30 W50+ W53/34	JKB	16	– [5]	– [5]	– [5]	180
			20	– [5]	– [5]	– [5]	360
	W55/42	JB	10	50	15	15	40
			12	60	25	25	70
			16	80	60	65	180
			20	100	120	130	360
			24	120	200	230	620
	K72/48 W72/48	JA	20	100	120	130	360
			24	120	200	230	620
			27	135	300	340	900
			30	150	380	460	1200

[1] Materials according to Annex A13 and A14
[2] According to Annex B7, Fig. 1
[3] According to Annex B7, Fig. 2
[4] T_{inst} must not be exceeded
[5] Product not available

JORDAHL anchor channel JTA, JZA, JXA, and JXA-PC

Intended use
Installation parameters of channel bolts (JTA)

Annex B5

Table B5: Minimum spacing and installation torque of channel bolts (for JZA, JXA, and JXA-PC)

Anchor channel		Channel bolt		Min. spacing of the channel bolt $s_{min,cbo}$	Installation torque T_{inst} [4]		
					General [2] $T_{inst,g}$	Steel-steel [3] $T_{inst,s}$	
		Type	d		Steel 4.6; 8.8 [1] Stainless steel 50; 70 [1]	Steel 4.6 [1] Stainless steel 50 [1]	Steel 8.8 [1] Stainless steel 70 [1]
			[mm]	[mm]	[Nm]		
JZA	K41/22	JZS	12	60	70	70	70
			16	80	130	130	130
JXA	W29/20	JXD	10	50	30	– [5]	40
			12	60	70	– [5]	70
	W38/23	JXH	12	60	70	– [5]	70
			16	80	120	– [5]	180
	W64/44	JXE	20	100	300	– [5]	360
			24	120	350	– [5]	450
JXA JXA-PC	W53/34	JXB	16	80	180	– [5]	180
			20	100	300	– [5]	360

[1] Materials according to Annex A13 and A14
[2] According to Annex B7, Fig. 1
[3] According to Annex B7, Fig. 2
[4] T_{inst} must not be exceeded
[5] Product not available

JORDAHL anchor channel JTA, JZA, JXA, and JXA-PC

Intended use
Installation parameters of channel bolts (JZA and JXA)

Annex B6

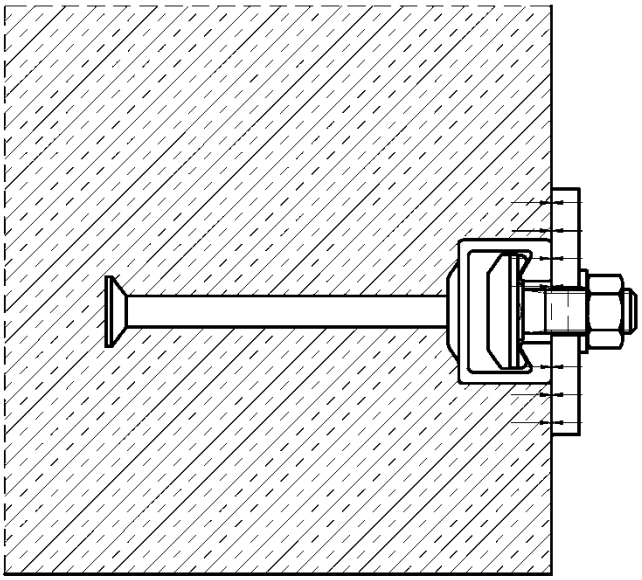

Fig. 1

General:

The fixture is in contact with the channel profile and the concrete surface. The installation torques according to Annex B5, Table B4 and Annex B6, Table B5 shall be applied and must not be exceeded.

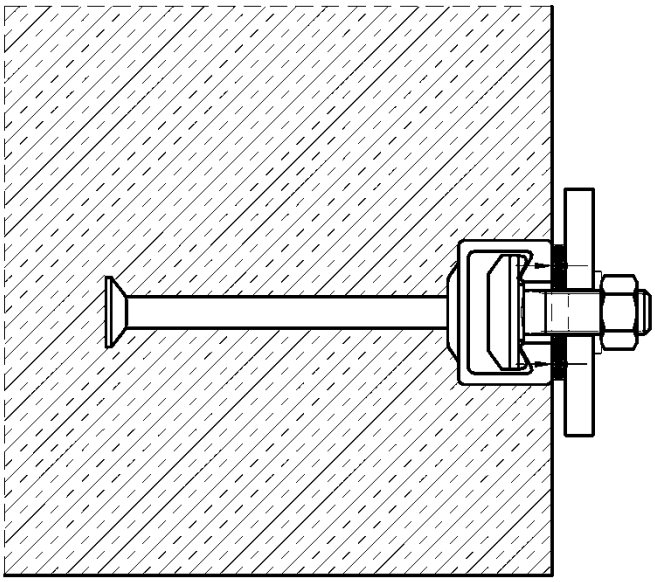

Fig. 2

Steel-steel contact:

The fixture is not in contact with the concrete surface. The fixture is fastened to the anchor channel by suitable steel part (e.g. washer). The installation torques according to Annex B5, Table B4 and Annex B6, Table B5 shall be applied and must not be exceeded.

JORDAHL anchor channel JTA, JZA, JXA, and JXA-PC	**Annex B7**
Intended use Position of the fixture	

1. Fixing anchor channel

Install the channel surface flush and fix the channel undisplaceable to the formwork or to the reinforcement.

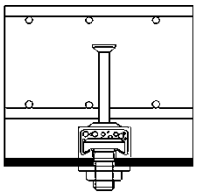

a) Fixing to steel formwork
With JORDAHL T-bolts and nuts, with rivets, cramps or with magnet fixings.

or

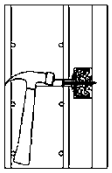

b) Fixing to timber formwork
With nails through the pre punched holes in the back of the channels and with staples.

or

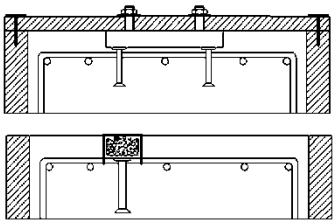

c) Fixing of anchor channels at the top
- To timber batten on the side formwork (e.g. with JORDAHL T-bolts).
- Fixing from above directly to the reinforcement or to a mounting reinforcing bar, attach the channel by wire binding.

2. Pouring concrete and regular compacting of concrete

Compact the concrete properly around the channel and the anchors.

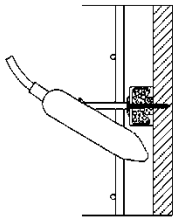

a) at side of member

or

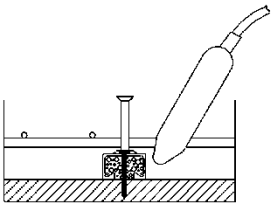

b) at bottom of member

or

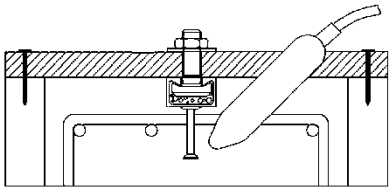

c) at top of member

3. Removing of the infill

Clean the channel on the outside after removing the formwork.

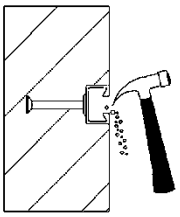

a) PS foam infill
With a hammer or a hook.

or

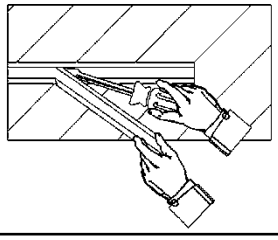

b) PE foam infill
By hand or with help of a screw driver in one piece.

JORDAHL anchor channel JTA, JZA, JXA, and JXA-PC	**Annex B8**
Intended use Installation instruction anchor channels	

4. Fastening the JORDAHL T-bolt to the JORDAHL anchor channel

Fig. 1

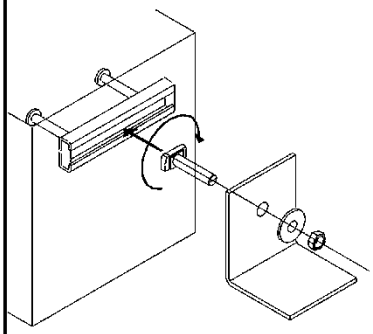

a) Installation torques (general)

1. Insert the JORDAHL T-bolt into the channel slot at any point along the channel length between the anchors (Fig. 1).
2. Turn the channel bolt 90° clockwise and the head of the channel bolt locks into position (Fig. 1).
3. Do not mount the channel bolt at the end of the channel within the end spacing x according to Annex A10 and A11.
4. Use the washer under the nut (Fig. 1).
5. Check the correct fit of the channel bolt.
   The groove on the shank end of the channel bolt must be perpendicular to the channel longitudinal axis.
6. Tighten the nuts to the installation torque according to Table 1 (Fig. 2). The installation torque must not be exceeded.

Fig. 2

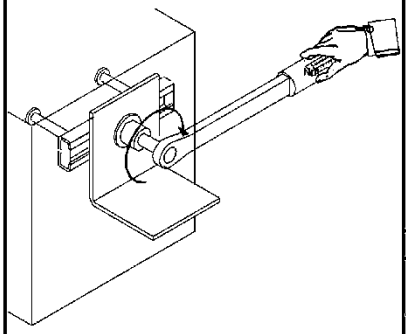

Table 1

Anchor channel		Strength grade	$T_{inst,g}$ [Nm]								
			M6	M8	M10	M12	M16	M20	M24	M27	M30
JTA	K28/15	4.6; 8.8; 50; 70	3	8	13	15	-	-	-	-	-
	K38/17		-	-	15	25	40	-	-	-	-
	K40/25 W40/22 W40+		-	-	15	25	45	-	-	-	-
	K50/30 W50/30 W50+		-	-	15	25	60	75	-	-	-
	K53/34 W53/34		-	-	15	25	60	120	-	-	-
	W55/42		-	-	15	25	60	120	200	-	-
	K72/48 W72/48		-	-	-	-	-	120	200	300	380
JZA	K41/22		-	-	-	70	130	-	-	-	-
JXA(-PC)	W29/20		-	-	30	70	-	-	-	-	-
	W38/23		-	-	-	70	120	-	-	-	-
	W53/34		-	-	-	-	180	300	-	-	-
	W64/44		-	-	-	-	-	300	350	-	-

or

Fig. 3

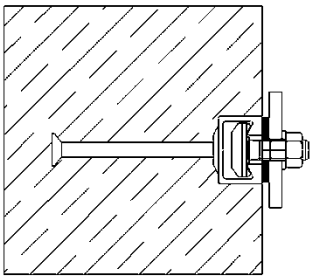

b) Installation torques (steel-steel contact)

1. Use washers between the channel and the fixture to create a defined contact
2. Tighten the nuts to the installation torque according to Table 2. The installation torque must not be exceeded.

Table 2

Anchor channel		Strength grade	$T_{inst,s}$ [Nm]								
			M6	M8	M10	M12	M16	M20	M24	M27	M30
JTA	K28/15, K38/17, W40/22, W40+, W50/30, W50+, W53/34, W55/42, W72/48	4.6	3	8	15	25	65	130	230	340	460
		50	-	-	13	24	60	115	-	-	-
		8.8	-	20	40	70	180	360	620	-	-
		70	-	15	30	50	130	250	-	-	-
JZA	K41/22	8.8; 50	-	-	-	70	130	-	-	-	-
JXA(-PC)	W29/20	8.8	-	-	40	70	-	-	-	-	-
	W38/23	8.8; 70	-	-	-	70	180	-	-	-	-
	W53/34	8.8; 70	-	-	-	-	180	360	-	-	-
	W64/44	8.8	-	-	-	-	-	360	450	-	-

JORDAHL anchor channel JTA, JZA, JXA, and JXA-PC

Intended use
Installation instruction channel bolts

Annex B9

5. Installation of JORDAHL gap filler set JGF

1. Slide the matching injection insert (Annex A14, Fig. 1) on channel bolt to rest on the anchor channel.
2. Install fixture, washer, and injection nut (Annex A14, Fig. 2).
3. Insert static mixer PM – 19E with mixer reduction MR[1)] (applicator gun, static mixer, and mixer reduction by injection mortar system manufacturer).
4. Inject injection mortar[2)] to fill the gap.

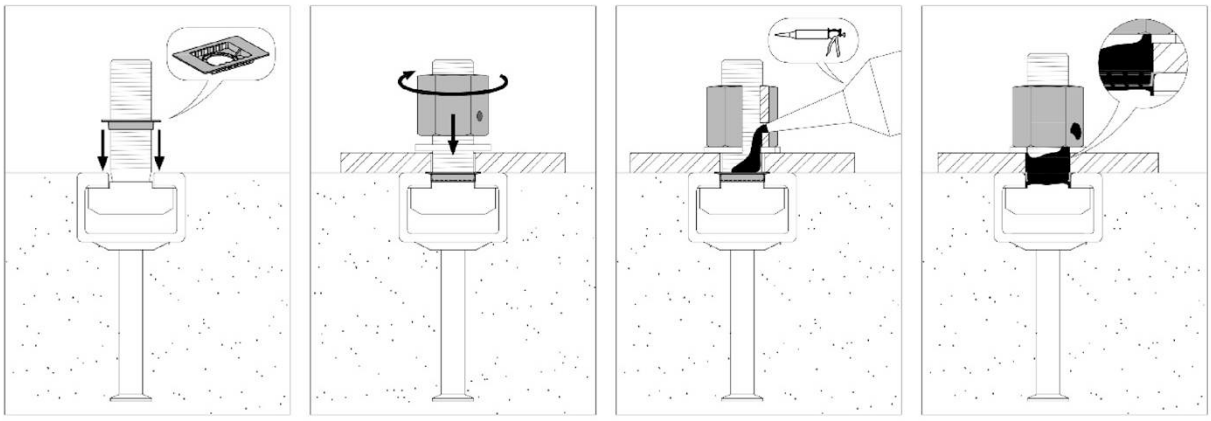

[1)] Outer diameter 4 mm
[2)] Dispense the first part of the injection mortar to waste until an even colour is achieve Chemofast Injection system EP 1000 for concrete according to ETA-19/0201 dated 25.02.2022 with the following working and curing time

Temperatur steel parts	Maximum working time	Minimum curing time
T	t_{work}	t_{cure}
+ 0 °C to + 4 °C	90 min	144 h
+ 5 °C to + 9 °C	80 min	48 h
+ 10 °C to + 14 °C	60 min	28 h
+ 15 °C to + 19 °C	40 min	18 h
+ 20 °C to + 24 °C	30 min	12 h
+ 25 °C to + 34 °C	12 min	9 h
+ 35 °C to + 39 °C	8 min	6 h
+ 40 °C	8 min	4 h
Temperature cartridge	+ 5 °C to + 40 °C	

Table C1: Characteristic resistances under tension load – Steel failure of anchor channel (JTA W)

Anchor channel			**JTA**						
			W40/22	**W40+**	**W50/30**	**W50+**	**W53/34**	**W55/42**	**W72/48**
Steel failure: Anchor									
Characteristic resistance	$N_{Rk,s,a}$	[kN]	20,0	30,0	32,0	39,0	56,0	103,0	102,0
Partial factor	γ_{Ms} [1)]		1,8						
Steel failure: Connection between anchor and channel									
Characteristic resistance	$N_{Rk,s,c}$	[kN]	20,0	29,0	31,0	39,0	55,0	103,0	100,0
Partial factor	$\gamma_{Ms,ca}$ [1)]		1,8						
Steel failure: Local flexure of channel lips									
Spacing of channel bolts for $N_{Rk,s,l}$	$s_{l,N}$	[mm]	79	79	98	98	105	109	144
Characteristic resistance	$N^0_{Rk,s,l}$	[kN]	38,8 [2)] 51,1 [3)]	38,8 [2)] 51,1 [3)]	43,0 [2)] 57,0 [3)]	43,0 [2)] 57,0 [3)]	72,5 [2)] 79,1 [3)]	119,0 [2)] – [4)]	120,0 [2)] – [4)]
Characteristic resistance [5)]	$N^0_{Rk,s,l}$	[kN]	38,0	38,0	38,0	38,0	72,0	– [4)]	– [4)]
Partial factor	$\gamma_{Ms,l}$ [1)]		1,8						

[1)] In absence of other national regulations
[2)] Carbon steel
[3)] Stainless steel
[4)] No performance assessed
[5)] If notching channel bolts JKC and JKB are used

Table C2: Characteristic resistances under tension load – Steel failure of anchor channel (JTA K)

Anchor channel			**JTA**					
			K28/15	**K38/17**	**K40/25**	**K50/30**	**K53/34**	**K72/48**
Steel failure: Anchor								
Characteristic resistance	$N_{Rk,s,a}$	[kN]	13,0	18,0	20,0	32,0	56,0	102,0
Partial factor	γ_{Ms} [1)]		1,8					
Steel failure: Connection between anchor and channel								
Characteristic resistance	$N_{Rk,s,c}$	[kN]	9,0	18,0	20,0	31,0	55,0	100,0
Partial factor	$\gamma_{Ms,ca}$ [1)]		1,8					
Steel failure: Local flexure of channel lips								
Spacing of channel bolts for $N_{Rk,s,l}$	$s_{l,N}$	[mm]	56	76	80	100	107	144
Characteristic resistance	$N^0_{Rk,s,l}$	[kN]	9,0	18,0	20,0	31,0	55,0	100,0
Partial factor	$\gamma_{Ms,l}$ [1)]		1,8					

[1)] In absence of other national regulations

Table C3: Characteristic resistances under tension load – Steel failure of anchor channel (JZA and JXA)

Anchor channel			**JZA**	**JXA**			
			K41/22	**W29/20**	**W38/23**	**W53/34**	**W64/44**
Steel failure: Anchor							
Characteristic resistance	$N_{Rk,s,a}$	[kN]	25,4 [2]	25,4 [2]	31,4 [2]	57,1 [2]	115,0 [2]
			25,4 [3]	– [4]	31,4 [3]	57,1 [3]	– [4]
Partial factor	γ_{Ms} [1]		1,8				
Steel failure: Connection between anchor and channel							
Characteristic resistance	$N_{Rk,s,c}$	[kN]	14,5 [2]	19,3 [2]	35,3 [2]	72,6 [2]	106,3 [2]
			18,0 [3]	– [4]	39,0 [3]	49,0 [3]	– [4]
Partial factor	$\gamma_{Ms,ca}$ [1]		1,8				
Steel failure: Local flexure of channel lips							
Spacing of channel bolts for $N_{Rk,s,l}$	$s_{l,N}$	[mm]	82	58	76	105	128
Characteristic resistance	$N^0_{Rk,s,l}$	[kN]	14,5 [2]	19,3 [2]	35,3 [2]	72,6 [2]	106,3 [2]
			18,0 [3]	– [4]	42,8 [3]	64,6 [3]	– [4]
Partial factor	$\gamma_{Ms,l}$ [1]		1,8				

[1] In absence of other national regulations
[2] Carbon steel
[3] Stainless steel
[4] No performance assessed

Table C4: Characteristic resistances under tension load – Steel failure of anchor channel (JXA-PC)

Anchor channel			**JXA-PC**
			W53/34
Steel failure: Anchor			
Characteristic resistance	$N_{Rk,s,a}$	[kN]	84,7
Partial factor	γ_{Ms} [1)]		1,4
Steel failure: Connection between anchor and channel			
Characteristic resistance	$N_{Rk,s,c}$	[kN]	87,5
Partial factor	$\gamma_{Ms,ca}$ [1)]		1,8
Steel failure: Local flexure of channel lips			
Spacing of channel bolts for $N_{Rk,s,l}$	$s_{l,N}$	[mm]	105
Characteristic resistance	$N^0_{Rk,s,l}$	[kN]	87,5
Partial factor	$\gamma_{Ms,l}$ [1)]		1,8

[1)] In absence of other national regulations

Table C5: Characteristic flexural resistance of anchor channel (JTA W)

Anchor channel				**JTA**						
				W40/22	**W40+**	**W50/30**	**W50+**	**W53/34**	**W55/42**	**W72/48**
Steel failure: Flexure of channel										
Characteristic flexural resistance of channel	Round anchor, I-anchor	$M_{Rk,s,flex}$	[Nm]	1406	1406	2830	2830	3373	6447	8593
	T-anchor			703	– [2]	1416	– [2]	2297	4454	– [2]
Characteristic flexural resistance of channel [3]	Round anchor, I-anchor	$M_{Rk,s,flex}$	[Nm]	1138	1138	1756	1756	3373	– [2]	– [2]
	T-anchor			703	– [2]	1416	– [2]	2297	– [2]	– [2]
Partial factor		$\gamma_{Ms,flex}$ [1]		1,15						

[1] In absence of other national regulations
[2] No performance assessed
[3] If notching channel bolts are used

Table C6: Characteristic flexural resistance of anchor channel (JTA K)

Anchor channel				**JTA**					
				K28/15	**K38/17**	**K40/25**	**K50/30**	**K53/34**	**K72/48**
Steel failure: Flexure of channel									
Characteristic flexural resistance of channel	Round anchor, I-anchor	$M_{Rk,s,flex}$	[Nm]	317	580	1071	1673	2984	8617
Partial factor		$\gamma_{Ms,flex}$ [1]		1,15					

[1] In absence of other national regulations

Table C7: Characteristic flexural resistance of anchor channel (JZA and JXA)

Anchor channel				**JZA**	**JXA**			
				K41/22	**W29/20**	**W38/23**	**W53/34**	**W64/44**
Steel failure: Flexure of channel								
Characteristic flexural resistance of channel	Round anchor	$M_{Rk,s,flex}$	[Nm]	629 (765) [2]	608	1052 (1581) [2]	4147 (3247) [2]	– [3]
	I-anchor			– [3]	– [3]	1581	4147	7078
	T-anchor			– [3]	– [3]	832	2476	– [3]
Partial factor		$\gamma_{Ms,flex}$ [1]		1,15				

[1] In absence of other national regulations
[2] Values in brackets for stainless steel
[3] No performance assessed

Table C8: Characteristic flexural resistance of anchor channel (JXA-PC)

Anchor channel			**JXA-PC**
			W53/34
Steel failure: Flexure of channel			
Characteristic flexural resistance of channel	$M_{Rk,s,flex}$	[Nm]	4546
Partial factor	$\gamma_{Ms,flex}$ [1]		1,15

[1] In absence of other national regulations

JORDAHL anchor channel JTA, JZA, JXA, and JXA-PC

Performance
Characteristic resistances under tension load – steel failure anchor channels (JZA, JXA, and JXA-PC)

Annex C6

Table C9: Characteristic resistances under tension load – Steel failure of channel bolts (JTA)

Channel bolt				**JD, JH, JC, JKC, JB, JKB, JA**								
Thread diameter				**M6**	**M8**	**M10**	**M12**	**M16**	**M20**	**M24**	**M27**	**M30**
Steel failure: Channel bolt												
Characteristic resistance [2]	$N_{Rk,s}$	[kN]	4.6 [1]	8,0	14,6	23,2	33,7	62,8	98,0	141,2	183,6	224,4
			8.8 [1]	16,1	29,3	46,4	67,4	125,6	196,0	282,4	367,2	448,8
			50 [1]	10,1	18,3	29,0	42,2	78,5	122,5	176,5	229,5	280,5
			70 [1]	14,1	25,6	40,6	59,0	109,9	171,5	247,1	321,3	392,7
Partial factor	γ_{Ms} [3]		4.6 [1]	2,00								
			8.8 [1]	1,50								
			50 [1]	2,86								
			70 [1]	1,87								

[1] Materials according to Annex A2 to A4
[2] In conformity to EN ISO 898-1:2013 + AC:2013
[3] In absence of other national regulations

Table C10: Characteristic resistances under tension load – Steel failure of channel bolts (JZA, JXA, and JXA-PC)

Channel bolt				**JZS**		**JXD, JXH, JXB, JXE**				
Thread diameter				**M12**	**M16**	**M10**	**M12**	**M16**	**M20**	**M24**
Steel failure: Channel bolt										
Characteristic resistance [2]	$N_{Rk,s}$	[kN]	8.8 [1]	48,9	98,9	46,4	67,4	125,6	196,0	282,4
			50 [1]	42,2	78,5	– [5]	– [5]	– [5]	– [5]	– [5]
			70 [1]	– [5]	– [5]	– [5]	59,0 [4]	109,9 [4]	171,5 [4]	– [5]
Partial factor	γ_{Ms} [3]		8.8 [1]	1,50						
			50 [1]	2,86						
			70 [1]	1,87						

[1] Materials according to Annex A2 to A4
[2] In conformity to EN ISO 898-1:2013 + AC:2013
[3] In absence of other national regulations
[4] Available only as JXH and JXB
[5] No performance assessed

Table C11: Characteristic resistances under tension load – Concrete failure of anchor channel (JTA W)

Anchor channel				**JTA**						
				W40/22	**W40+**	**W50/30**	**W50+**	**W53/34**	**W55/42**	**W72/48**
Concrete failure: Pullout										
Characteristic resistance in cracked concrete C12/15	Round anchor	$N_{Rk,p}$	[kN]	10,8	17,3 (10,8)[1]	15,9	19,8	29,7	38,4	50,9
	I-anchor	$N_{Rk,p}$	[kN]	23,4	24,8	29,2	29,7	39,6	52,2	46,4
	T-anchor	$N_{Rk,p}$	[kN]		– [3]		– [3]			– [3]
Characteristic resistance in uncracked concrete C12/15	Round anchor	$N_{Rk,p}$	[kN]	15,1	24,2 (15,1)[1]	22,3	27,7	41,6	53,8	71,3
	I-anchor	$N_{Rk,p}$	[kN]	32,8	34,7	40,9	41,6	55,4	73,1	65,0
	T-anchor	$N_{Rk,p}$	[kN]		– [3]		– [3]			– [3]
Increasing factor of $N_{Rk,p} = N_{Rk,p}$ (C12/15) · ψ_c	C20/25	ψ_c	[-]	1,67						
	C25/30	ψ_c	[-]	2,08						
	C30/37	ψ_c	[-]	2,50						
	C35/45	ψ_c	[-]	2,92						
	C40/50	ψ_c	[-]	3,33						
	C45/55	ψ_c	[-]	3,75						
	C50/60	ψ_c	[-]	4,17						
	C55/67	ψ_c	[-]	4,58						
	≥C60/75	ψ_c	[-]	5,00						
Partial factor		γ_{Mp}[2]		1,5						
Concrete failure: Concrete cone										
Product factor k_1	Round, I-anchor	$k_{cr,N}$	[-]	7,9	8,0	8,1	8,2	8,7	8,9	8,9
	T-anchor	$k_{cr,N}$	[-]	7,5	– [3]	7,7	– [3]	7,8	7,9	– [3]
	Round, I-anchor	$k_{ucr,N}$	[-]	11,2	11,5	11,5	11,7	12,4	12,6	12,7
	T-anchor	$k_{ucr,N}$	[-]	10,7	– [3]	11,0	– [3]	11,2	11,3	– [3]
Partial factor		γ_{Mc}[2]		1,5						
Concrete failure: Splitting										
Charact. edge dist.	Round, I-anchor	$c_{cr,sp}$	[mm]	237	273	282	318	465	525	537
	T-anchor	$c_{cr,sp}$	[mm]	171	– [3]	213	– [3]	228	252	– [3]
Charact. spacing	Round, I-anchor	$s_{cr,sp}$	[mm]	474	546	564	636	930	1050	1074
	T-anchor	$s_{cr,sp}$	[mm]	342	– [3]	426	– [3]	456	504	– [3]
Partial factor		γ_{Msp}[2]		1,5						

[1] Values in brackets for stainless steel anchors
[2] In absence of other national regulations
[3] No performance assessed

JORDAHL anchor channel JTA, JZA, JXA, and JXA-PC

Performance
Characteristic resistances under tension load – concrete failure anchor channels (JTA W)

Annex C8

Table C12: Characteristic resistances under tension load – Concrete failure of anchor channel (JTA K)

Anchor channel				**JTA**					
				K28/15	**K38/17**	**K40/25**	**K50/30**	**K53/34**	**K72/48**
Concrete failure: Pullout									
Characteristic resistance in cracked concrete C12/15	Round anchor	$N_{Rk,p}$	[kN]	6,7	14,7	10,8	15,9	29,7	50,9
	I-anchor			11,7	11,7	14,0	21,1	25,7	46,4
Characteristic resistance in uncracked concrete C12/15	Round anchor	$N_{Rk,p}$	[kN]	9,4	20,6	15,1	22,3	41,6	71,3
	I-anchor			16,4	16,4	19,7	29,5	36,0	65,0
Increasing factor of $N_{Rk,p} = N_{Rk,p}$ (C12/15) · ψ_c	C20/25	ψ_c	[-]	1,67					
	C25/30			2,08					
	C30/37			2,50					
	C35/45			2,92					
	C40/50			3,33					
	C45/55			3,75					
	C50/60			4,17					
	C55/67			4,58					
	≥C60/75			5,00					
Partial factor		γ_{Mp} [1)]		1,5					
Concrete failure: Concrete cone									
Product factor k_1	Round, I-anchor	$k_{cr,N}$	[-]	7,2	7,8	7,9	8,1	8,7	8,9
	Round, I-anchor	$k_{ucr,N}$	[-]	10,3	11,2	11,2	11,5	12,4	12,7
Partial factor		γ_{Mc} [1)]		1,5					
Concrete failure: Splitting									
Charact. edge dist.	Round, I-anchor	$c_{cr,sp}$	[mm]	135	228	237	282	465	537
Charact. spacing	Round, I-anchor	$s_{cr,sp}$	[mm]	270	456	474	564	930	1074
Partial factor		γ_{Msp} [1)]		1,5					

[1)] In absence of other national regulations

JORDAHL anchor channel JTA, JZA, JXA, and JXA-PC

Performance
Characteristic resistances under tension load – concrete failure anchor channels (JTA K)

Annex C9

Table C13: Characteristic resistances under tension load – Concrete failure of anchor channel (JZA and JXA)

Anchor channel				**JZA**	**JXA**			
				K41/22	**W29/20**	**W38/23**	**W53/34**	**W64/44**
Concrete failure: Pullout								
Characteristic resistance in cracked concrete C12/15	Round anchor	$N_{Rk,p}$	[kN]	14,7	14,7	19,8	29,7	– [2]
	I-anchor			– [2]	– [2]	19,8	39,6	52,2
	T-anchor							– [2]
Characteristic resistance in uncracked concrete C12/15	Round anchor	$N_{Rk,p}$	[kN]	20,5	20,5	27,7	41,6	– [2]
	I-anchor			– [2]	– [2]	27,7	55,4	73,1
	T-anchor							– [2]
Increasing factor of $N_{Rk,p} = N_{Rk,p}$ (C12/15) · ψ_c	C20/25	ψ_c	[-]	1,67				
	C25/30			2,08				
	C30/37			2,50				
	C35/45			2,92				
	C40/50			3,33				
	C45/55			3,75				
	C50/60			4,17				
	C55/67			4,58				
	≥C60/75			5,00				
Partial factor		γ_{Mp} [1]		1,5				
Concrete failure: Concrete cone								
Product factor k_1	Round, I-anchor	$k_{cr,N}$	[-]	7,8	7,9	8,1	8,7	8,9
	T-anchor			– [2]	– [2]	7,4	7,8	– [2]
	Round, I-anchor	$k_{ucr,N}$	[-]	11,1	11,2	11,5	12,4	12,7
	T-anchor			– [2]	– [2]	10,6	11,2	– [2]
Partial factor		γ_{Mc} [1]		1,5				
Concrete failure: Splitting								
Charact. edge dist.	Round, I-anchor	$c_{cr,sp}$	[mm]	225	234	285	465	537
	T-anchor			– [2]	– [2]	162	228	– [2]
Charact. spacing	Round, I-anchor	$s_{cr,sp}$	[mm]	450	468	570	930	1074
	T-anchor			– [2]	– [2]	324	456	– [2]
Partial factor		γ_{Msp} [1]		1,5				

[1] In absence of other national regulations
[2] No performance assessed

JORDAHL anchor channel JTA, JZA, JXA, and JXA-PC

Performance
Characteristic resistances under tension load – concrete failure anchor channels (JZA and JXA)

Annex C10

Table C14: Characteristic resistances under tension load – Concrete failure of anchor channel (JXA-PC)

Anchor channel				**JXA-PC**
				W53/34
Concrete failure: Pullout				
Characteristic resistance in cracked concrete C12/15		$N_{Rk,p}$	[kN]	124,6
Characteristic resistance in uncracked concrete C12/15		$N_{Rk,p}$	[kN]	174,5
Increasing factor of $N_{Rk,p} = N_{Rk,p}$ (C12/15) · ψ_c	C20/25	ψ_c	[-]	1,67
	C25/30			2,08
	C30/37			2,50
	C35/45			2,92
	C40/50			3,33
	C45/55			3,75
	C50/60			4,17
	C55/67			4,58
	≥C60/75			5,00
Partial factor		γ_{Mp} [1)]		1,5
Concrete failure: Concrete cone				
Product factor k_1		$k_{cr,N}$	[-]	8,9
		$k_{ucr,N}$	[-]	12,7
Partial factor		γ_{Mc} [1)]		1,5
Concrete failure: Splitting				
Charact. edge distance		$c_{cr,sp}$	[mm]	540
Charact. spacing		$s_{cr,sp}$	[mm]	1080
Partial factor		γ_{Msp} [1)]		1,5

[1)] In absence of other national regulations

Table C15: Displacements under tension load (JTA W)

Anchor channel			**JTA**						
			W40/22	**W40+**	**W50/30**	**W50+**	**W53/34**	**W55/42**	**W72/48**
Tension load	N	[kN]	15,1	15,1	14,9	14,9	28,6	47,2	39,7
Short-term displacem.	δ_{N0}	[mm]	1,9	1,9	1,7	1,7	1,6	2,4	0,5
Long-term displacem.	$\delta_{N\infty}$	[mm]	3,8	3,8	3,4	3,4	3,1	4,8	1,0

Table C16: Displacements under tension load (JTA K)

Anchor channel			**JTA**					
			K28/15	**K38/17**	**K40/25**	**K50/30**	**K53/34**	**K72/48**
Tension load	N	[kN]	3,6	7,1	7,9	12,3	21,8	39,7
Short-term displacem.	δ_{N0}	[mm]	0,3	0,3	0,4	0,4	0,5	0,5
Long-term displacem.	$\delta_{N\infty}$	[mm]	0,6	0,6	0,8	0,8	1,0	1,0

Table C17: Displacements under tension load (JZA and JXA)

Anchor channel			**JZA**	**JXA**			
			K41/22	**W29/20**	**W38/23**	**W53/34**	**W64/44**
Tension load	N	[kN]	7,4	8,0	14,8	27,4	42,9
Short-term displacem.	δ_{N0}	[mm]	0,6	0,4	1,3	1,4	1,5
Long-term displacem.	$\delta_{N\infty}$	[mm]	1,2	0,8	2,6	2,8	3,0

Table C18: Displacements under tension load (JXA-PC)

Anchor channel			**JXA-PC**
			W53/34
Tension load	N	[kN]	34,7
Short-term displacem.	δ_{N0}	[mm]	1,3
Long-term displacem.	$\delta_{N\infty}$	[mm]	2,6

Table C19: Characteristic resistances under shear load – Steel failure of anchor channel (JTA W)

Anchor channel			**JTA**						
			W40/22	**W40+**	**W50/30**	**W50+**	**W53/34**	**W55/42**	**W72/48**
Steel failure: Anchor									
Characteristic resistance	$V_{Rk,s,a,y}$	[kN]	35,0	35,0	52,0	59,0	78,0	110,0	146,0
Characteristic resistance	$V_{Rk,s,a,x}$ [4]	[kN]	12,2	18,0	19,0	23,5	34,2	– [3]	– [3]
Partial factor	γ_{Ms} [1]		1,5						
Steel failure: Connection between anchor and channel									
Characteristic resistance	$V_{Rk,s,c,y}$	[kN]	35,0	35,0	52,0	59,0	78,0	110,0	146,0
Characteristic resistance	$V_{Rk,s,c,x}$ [4]	[kN]	10,0	14,5	15,5	19,5	27,5	– [3]	– [3]
Partial factor	$\gamma_{Ms,ca}$ [1]		1,8						
Steel failure: Local flexure of channel lips									
Spacing of channel bolts for $V_{Rk,s,l}$	$s_{l,V}$	[mm]	79	79	98	98	105	109	144
Characteristic resistance	$V^0_{Rk,s,l,y}$	[kN]	35,0	35,0	52,0	59,0	78,0	110,0	146,0
Partial factor	$\gamma_{Ms,l}$ [1]		1,8						
Characteristic resistance	$V_{Rk,s,l,x}$ [4]	[kN]	6,1 (2,9) [2]		13,2 (4,7) [2]			– [3]	– [3]
Installation factor	γ_{inst}		1,4		1,2 (1,4) [2]			– [3]	
Partial factor	$\gamma_{Ms,l,x}$ [1]		1,8						

[1] In absence of other national regulations
[2] Values in brackets for stainless steel
[3] No performance assessed
[4] If notching channel bolts are used

Table C20: Characteristic resistances under shear load – Steel failure of anchor channel (JTA K)

Anchor channel			**JTA**					
			K28/15	**K38/17**	**K40/25**	**K50/30**	**K53/34**	**K72/48**
Steel failure: Anchor								
Characteristic resistance	$V_{Rk,s,a,y}$	[kN]	13,0	18,0	20,0	32,0	56,0	102,0
Partial factor	γ_{Ms} [1)]		1,5					
Steel failure: Connection between anchor and channel								
Characteristic resistance	$V_{Rk,s,c,y}$	[kN]	9,0	18,0	20,0	31,0	55,0	100,0
Partial factor	$\gamma_{Ms,ca}$ [1)]		1,8					
Steel failure: Local flexure of channel lips								
Spacing of channel bolts for $V_{Rk,s,l}$	$s_{l,V}$	[mm]	56	76	80	100	107	144
Characteristic resistance	$V^0_{Rk,s,l,y}$	[kN]	9,0	18,0	20,0	31,0	55,0	100,0
Partial factor	$\gamma_{Ms,l}$ [1)]		1,8					

[1)] In absence of other national regulations

Table C21: Characteristic resistances under shear load – Steel failure of anchor channel (JZA and JXA)

Anchor channel			**JZA**	**JXA**			
			K41/22	**W29/20**	**W38/23**	**W53/34**	**W64/44**
Steel failure: Anchor							
Characteristic resistance	$V_{Rk,s,a,y}$	[kN]	24,2 (28,0) [2]	18,0 (– [3]) [2]	48,3 (42,6) [2]	101,1 (91,7) [2]	121,0 (– [3]) [2]
Characteristic resistance	$V_{Rk,s,a,x}$	[kN]	15,3	15,3 (– [3]) [2])	18,8	34,3	69,0 (– [3]) [2]
Partial factor	γ_{Ms} [1]		1,5				
Steel failure: Connection between anchor and channel							
Characteristic resistance	$V_{Rk,s,c,y}$	[kN]	24,2 (28,0) [2]	18,0 (– [3]) [2]	48,3 (42,6) [2]	101,1 (91,7) [2]	121,0 (– [3]) [2]
Characteristic resistance	$V_{Rk,s,c,x}$	[kN]	8,7 (10,8) [2]	11,6 (– [3]) [2]	21,2 (23,5) [2]	43,6 (29,4) [2]	63,8 (– [3]) [2]
Partial factor	$\gamma_{Ms,ca}$ [1]		1,8				
Steel failure: Local flexure of channel lips							
Spacing of channel bolts for $V_{Rk,s,l}$	$s_{l,V}$	[mm]	82	58	76	105	128
Characteristic resistance	$V^0_{Rk,s,l,y}$	[kN]	24,2 (28,0) [2]	18,0 (– [3]) [2]	48,3 (42,6) [2]	101,1 (91,7) [2]	121,0 (– [3]) [2]
Partial factor	$\gamma_{Ms,l}$ [1]		1,8				
Characteristic resistance	$V_{Rk,s,l,x}$	[kN]	10,0 (10,7) [2]	12,0 (– [3]) [2]	19,4 (11,9) [2]	33,8 (22,8) [2]	64,5 (– [3]) [2]
Installation factor	γ_{inst}		1,0				
Partial factor	$\gamma_{Ms,l,x}$ [1]		1,8				

[1] In absence of other national regulations
[2] Values in brackets for stainless steel
[3] No performance assessed

Table C22: Characteristic resistances under shear load – Steel failure of anchor channel (JXA-PC)

Anchor channel			**JXA-PC**
			W53/34
Steel failure: Anchor			
Characteristic resistance	$V_{Rk,s,a,y}$	[kN]	101,1
Characteristic resistance	$V_{Rk,s,a,x}$	[kN]	50,8
Partial factor	γ_{Ms} [1)]		1,5
Steel failure: Connection between anchor and channel			
Characteristic resistance	$V_{Rk,s,c,y}$	[kN]	101,1
Characteristic resistance	$V_{Rk,s,c,x}$	[kN]	43,7
Partial factor	$\gamma_{Ms,ca}$ [1)]		1,8
Steel failure: Local flexure of channel lips			
Spacing of channel bolts for $V_{Rk,s,l}$	$s_{l,V}$	[mm]	105
Characteristic resistance	$V^0_{Rk,s,l,y}$	[kN]	101,1
Partial factor	$\gamma_{Ms,l}$ [1)]		1,8
Characteristic resistance	$V_{Rk,s,l,x}$	[kN]	48,0
Installation factor	γ_{inst}		1,0
Partial factor	$\gamma_{Ms,l,x}$ [1)]		1,8

[1)] In absence of other national regulations

Table C23: Characteristic resistances under shear load – Concrete failure of anchor channel (JTA W)

Anchor channel			**JTA**						
			W40/22	**W40+**	**W50/30**	**W50+**	**W53/34**	**W55/42**	**W72/48**
Concrete failure: Pry-out									
Product factor		k_8	2,0 (1,0)[2]	2,0	2,0	2,0	2,0	2,0	2,0
Partial factor		γ_{Mc}[1]	1,5						
Concrete failure: Concrete edge									
Product factor k_{12}	cracked concrete	$k_{cr,V}$	7,5 (7,0)[2]	7,5	7,5	7,5	7,5	7,5 (6,9)[2]	7,5
	uncracked concrete	$k_{ucr,V}$	10,5 (9,8)[2]	10,5	10,5	10,5	10,5	10,5 (9,7)[2]	10,5
Partial factor		γ_{Mc}[1]	1,5						

[1] In absence of other national regulations
[2] Values in brackets for T-anchors

Table C24: Characteristic resistances under shear load – Concrete failure of anchor channel (JTA K)

Anchor channel			**JTA**					
			K28/15	**K38/17**	**K40/25**	**K50/30**	**K53/34**	**K72/48**
Concrete failure: Pry-out								
Product factor		k_8	1,0	2,0				
Partial factor		γ_{Mc}[1]	1,5					
Concrete failure: Concrete edge								
Product factor k_{12}	cracked concrete	$k_{cr,V}$	4,5	7,5				
	uncracked concrete	$k_{ucr,V}$	6,3	10,5				
Partial factor		γ_{Mc}[1]	1,5					

[1] In absence of other national regulations

JORDAHL anchor channel JTA, JZA, JXA, and JXA-PC	**Annex C17**
Performance Characteristic resistances under shear load – concrete failure anchor channels (JTA)	

Table C25: Characteristic resistances under shear load – Concrete failure of anchor channel (JZA and JXA)

Anchor channel			**JZA**	**JXA**			
			K41/22	**W29/20**	**W38/23**	**W53/34**	**W64/44**
Concrete failure: Pry-out							
Product factor		k_8	2,0	2,0	2,0 (1,0) [2]	2,0	2,0
Partial factor		γ_{Mc} [1]	1,5				
Concrete failure: Concrete edge							
Product factor k_{12}	cracked concrete	$k_{cr,V}$	7,5	6,1	7,5 (5,6) [2]	7,5 (6,4) [2]	7,5
	uncracked concrete	$k_{ucr,V}$	10,5	8,6	10,5 (7,9) [2]	10,5 (8,9) [2]	10,5
Partial factor		γ_{Mc} [1]	1,5				

[1] In absence of other national regulations
[2] Values in brackets for T-anchors

Table C26: Characteristic resistances under shear load – Concrete failure of anchor channel (JXA-PC)

Anchor channel			**JXA-PC**
			W53/34
Concrete failure: Pry-out			
Product factor		k_8	2,0
Partial factor		γ_{Mc} [1]	1,5
Concrete failure: Concrete edge			
Product factor k_{12}	cracked concrete	$k_{cr,V}$	7,5
	uncracked concrete	$k_{ucr,V}$	10,5
Partial factor		γ_{Mc} [1]	1,5

[1] In absence of other national regulations

Table C27: Characteristic resistances under shear loads – Steel failure of channel bolts (JTA)

Channel bolt				**JD, JH, JC, JKC, JB, JKB, JA**								
Thread diameter				**M6**	**M8**	**M10**	**M12**	**M16**	**M20**	**M24**	**M27**	**M30**
Steel failure: Channel bolt												
Characteristic resistance [2]	$V_{Rk,s}$	[kN]	4.6[1]	4,8	8,8	13,9	20,2	37,7	58,8	84,7	110,2	134,6
			8.8[1]	8,0	14,6	23,2	33,7	62,8	98,0	141,2	183,6	224,4
			50[1]	6,0	11,0	17,4	25,3	47,1	73,5	105,9	137,7	168,3
			70[1]	8,4	15,4	24,4	35,4	65,9	102,9	148,3	192,8	235,6
Characteristic flexural resistance	$M^0_{Rk,s}$	[Nm]	4.6[1]	6,3	15,0	29,9	52,4	133,2	259,6	449,0	665,8	889,6
			8.8[1]	12,2	30,0	59,8	104,8 (85,5) [3]	266,4 (234,0) [4]	519,3	898,0	1331,5	1799,2
			50[1]	7,6	18,7	37,4	65,5	166,5	324,5	561,3	832,2	1124,5
			70[1]	10,7	26,2	52,3	91,7 85,5) [3]	233,1	454,4	785,8	1165,1	1574,3
Partial factor	γ_{Ms} [5]		4.6[1]	1,67								
			8.8[1]	1,25								
			50[1]	2,38								
			70[1]	1,56								

[1] Materials according to Annex A2 bis A4
[2] In conformity to EN ISO 898-1:2013 + AC:2013
[3] Values in bracktes for combination with anchor channel JTA K 28/15
[4] Value in bracktes for combination with anchor channel JTA K 38/17
[5] In absence of other national regulations

JORDAHL anchor channel JTA, JZA, JXA, and JXA-PC

Performance
Characteristic resistances under shear load – steel failure channel bolts

Annex C19

Table C28: Characteristic resistances under shear loads – Steel failure of channel bolts (JZA, JXA, and JXA-C)

Channel bolt				**JZS**		**JXD, JXH, JXB, JXE**				
Thread diameter				**M12**	**M16**	**M10**	**M12**	**M16**	**M20**	**M24**
Steel failure: Channel bolt										
Characteristic resistance [2]	$V_{Rk,s}$	[kN]	8.8[1]	33,7	62,8	23,2	33,7	62,8	98.0	141,2
			50[1]	25,3	47,1	– [5]	– [5]	– [5]	– [5]	– [5]
			70[1]	– [5]	– [5]	– [5]	35,4 [4]	65,9 [4]	102,9 [4]	– [5]
Characteristic flexural resistance	$M^0_{Rk,s}$	[Nm]	8.8[1]	104,8	266,4	59,8	104,8	266,4	519,3	898,0
			50[1]	65,5	166,5	– [5]	– [5]	– [5]	– [5]	– [5]
			70[1]	– [5]	– [5]	– [5]	91,7 [4]	233,1 [4]	454,4 [4]	– [5]
Partial factor	γ_{Ms}[3]		8.8[1]	1,25						
			50[1]	2,38						
			70[1]	1,56						

[1] Materials according to Annex A2 bis A4
[2] In conformity to EN ISO 898-1:2013 + AC:2013
[3] In absence of other national regulations
[4] Available only as JXH and JXB
[5] No performance assessed

Table C29: Displacements under shear load (JTA W)

Anchor channel			JTA						
			W40/22	**W40+**	**W50/30**	**W50+**	**W53/34**	**W55/42**	**W72/48**
Shear load	V_y	[kN]	13,9	13,9	20,6	23,4	31,0	43,7	57,9
Short-term displacem.	$\delta_{V,y,0}$	[mm]	0,6	0,6	0,6	0,6	1,2	1,2	1,2
Long-term displacem.	$\delta_{V,y,\infty}$	[mm]	0,9	0,9	0,9	0,9	1,8	1,8	1,8
Shear load	V_x	[kN]	2,4	2,4	5,2	5,2	5,2	– [1]	– [1]
Short-term displacem.	$\delta_{V,x,0}$	[mm]	0,4	0,4	0,8	0,8	0,8	– [1]	– [1]
Long-term displacem.	$\delta_{V,x,\infty}$	[mm]	0,5	0,5	1,2	1,2	1,2	– [1]	– [1]

[1] No performance assessed

Table C30: Displacements under shear load (JTA K)

Anchor channel			JTA					
			K28/15	**K38/17**	**K40/25**	**K50/30**	**K53/34**	**K72/48**
Shear load	V_y	[kN]	3,6	7,1	7,9	12,3	21,8	39,7
Short-term displacem.	$\delta_{V,y,0}$	[mm]	0,6	0,6	0,6	0,6	1,2	1,2
Long-term displacem.	$\delta_{V,y,\infty}$	[mm]	0,9	0,9	0,9	0,9	1,8	1,8

Table C31: Displacements under shear load (JZA and JXA)

Anchor channel			JZA	JXA			
			K41/22	**W29/20**	**W38/23**	**W53/34**	**W64/44**
Shear load	V_y	[kN]	10,4	7,7	18,1	38,3	48,3
Short-term displacem.	$\delta_{V,y,0}$	[mm]	1,4	0,8	1,9	1,5	3,1
Long-term displacem.	$\delta_{V,y,\infty}$	[mm]	2,1	1,1	2,9	2,3	4,7
Shear load	V_x	[kN]	4,1	4,8	6,2	11,2	25,6
Short-term displacem.	$\delta_{V,x,0}$	[mm]	0,7	1,3	0,6	1,0	2,0
Long-term displacem.	$\delta_{V,x,\infty}$	[mm]	1,0	1,9	0,9	1,5	3,0

Table C32: Displacements under shear load (JXA-PC)

Anchor channel			**JXA-PC**
			W53/34
Shear load	V_y	[kN]	40,1
Short-term displacem.	$\delta_{V,y,0}$	[mm]	1,5
Long-term displacem.	$\delta_{V,y,\infty}$	[mm]	2,3
Shear load	V_x	[kN]	19,0
Short-term displacem.	$\delta_{V,x,0}$	[mm]	2,0
Long-term displacem.	$\delta_{V,x,\infty}$	[mm]	3,0

Table C33: Characteristic resistances under combined tension and shear load (JTA W)

Anchor channel		**JTA**						
		W40/22	**W40+**	**W50/30**	**W50+**	**W53/34**	**W55/42**	**W72/48**
Steel failure								
Product factors	k_{13}, k_{14}	Values are taken from EN 1992-4:2018						

Table C34: Characteristic resistances under combined tension and shear load (JTA K)

Anchor channel		**JTA**					
		K28/15	**K38/17**	**K40/25**	**K50/30**	**K53/34**	**K72/48**
Steel failure							
Product factors	k_{13}, k_{14}	Values are taken from EN 1992-4:2018					

Table C35: Characteristic resistances under combined tension and shear load (JZA and JXA)

Anchor channel		**JZA**	**JXA**				**JXA-PC**
		K41/22	**W29/20**	**W38/23**	**W53/34**	**W64/44**	**W53/34**
Steel failure							
Product factors	k_{13}, k_{14}	Values are taken from EN 1992-4:2018					

For Design method I or II for assessment method A1, A3, and B according to EOTA TR050, June 2022

Table C36: Combinations of anchor channels JTA and channel bolts for fatigue tension loading

Anchor channel		Anchor		Channel bolt			
		Type	d_a [mm]	Type	Thread diameter	Strength grade	Surface
JTA	W40/22	R	9,0	JC	M12	8.8	electroplated, hot-dip galvanized
					M16	4.6, 8.8	
	W40+		10,8	JC	M12	8.8	
					M16	4.6, 8.8	
	W50/30		9,0	JB	M16, M20	4.6, 8.8	
	W50+		10,0	JB	M16, M20	4.6, 8.8	
	W53/34		11,5	JB	M16, M20	8.8	

Table C37: Characteristic resistances of anchor channels JTA and channel bolts under fatigue tension load with n load cycles without static preload (N_{Ed} = 0 kN) – steel failure

Anchor channel		JTA				
		W40/22	W40+	W50/30	W50+	W53/34
Characteristic resistances under fatigue load in tension without static preload	Load cycles n	$\Delta N_{Rk,s,0,n}$ [kN]				
	$\leq 10^4$	11,7	12,8	16,5	16,5	22,2
	$\leq 10^5$	6,7	7,7	9,8	9,8	13,2
	$\leq 10^6$	3,8	4,7	5,8	5,8	7,9
	$\leq 2 \cdot 10^6$	3,2	4,0	4,9	4,9	6,7
	$\leq 5 \cdot 10^6$	2,6	3,3	4,0	4,0	5,5
	$\leq 10^8$	1,2				
	$\geq 10^8$ [1)]	– [2)]				

[1)] $\Delta N_{Rk,s,0,\infty} = \Delta N_{Rk,s,0,n}$ for $n \geq 10^8$
[2)] No performance assessed

Table C38: Characteristic resistances of anchor channels JTA under fatigue tension load with n load cycles without static preload (N_{Ed} = 0 kN) – concrete cone and pullout failure

Anchor channel		JTA
Reduction factor for $\Delta N_{Rk,c,0,n} = \eta_{c,fat} \cdot N_{Rk,c}$ $\Delta N_{Rk,p,0,n} = \eta_{p,fat} \cdot N_{Rk,p}$ Static resistances $N_{Rk,c}$ and $N_{Rk,p}$ according to Annex C7	Load cycles n	$\eta_{k,c,fat} = \eta_{k,p,fat}$ [-]
	$\leq 10^4$	0,736
	$\leq 10^5$	0,665
	$\leq 10^6$	0,600
	$\leq 2 \cdot 10^6$	0,582
	$\leq 5 \cdot 10^6$	0,559
	$\leq 6 \cdot 10^7$	0,500
	$\leq 10^8$	0,500
	$\geq 10^8$ [1)]	0,500

[1)] $\Delta N_{Rk,c,0,\infty} = \Delta N_{Rk,c,0,n}$ for $n \geq 10^8$ and $\Delta N_{Rk,p,0,\infty} = \Delta N_{Rk,p,0,n}$ for $n \geq 10^8$

For Design method I or II for assessment method C according to EOTA TR050, June 2022

Table C39: Combinations of anchor channels JXA and channel bolts for fatigue tension loading

Anchor channel		Anchor		Channel bolt			
		Type	d_a; t_w [mm]	Type	Thread diameter	Strength grade	Surface
JXA	W38/23	R	10,0	JXH	M16	8.8	Electroplated, hot-dip galvanized
	W53/34	R, I	11,5; 6,0	JXB	M20	8.8	
	W64/44	I	7,1	JXE	M24	8.8	

Table C40: Combinations of anchor channels JXA and channel bolts for fatigue shear[3)] as well as combined tension and shear loading[3)]

Anchor channel		Anchor		Channel bolt			
		Type	d_a; t_w [mm]	Type	Thread diameter	Strength grade	Surface
JXA	W38/23[1)]	–	–	–	–	–	Hot-dip galvanized
	W53/34[1)]	–	–	–	–	–	
	W64/44[2)]	I	7,1	JXE	M24	8.8	

[1)] No performance assessed
[2)] Requires the use of JORDAHL gap filler set, refer to Annex B10
[3)] Perpendicular to the longitudinal axis of the channel and in the direction of the longitudinal axis of the channel

For Design method I or II for assessment method C according to EOTA TR050, June 2022 (continued)

Table C41: Characteristic resistances ($\Delta N_{Rk,s,lo,n}$) of anchor channels JXA and channel bolts under fatigue tension load with n load cycles with characteristic lower load ($N_{lok,s,n}$) – steel failure

Anchor channel		JXA					
		W38/23		W53/34		W64/44	
	Load cycles n	$\Delta N_{Rk,s,lo,n}$ [kN]	$N_{lok,s,n}$ [kN]	$\Delta N_{Rk,s,lo,n}$ [kN]	$N_{lok,s,n}$ [kN]	$\Delta N_{Rk,s,lo,n}$ [kN]	$N_{lok,s,n}$ [kN]
Characteristic resistances under fatigue tension load with static preload	$\leq 10^4$	16,0	0,0	30,0	0,0	55,0	0,0
	$2 \cdot 10^4$	16,0	0,0	29,0	0,0	45,2	0,0
	$5 \cdot 10^4$	13,3	2,5	22,5	3,0	34,6	9,4
	$1 \cdot 10^5$	10,9	4,9	18,5	6,7	28,3	16,9
	$2 \cdot 10^5$	8,9	6,9	15,2	9,7	23,1	23,0
	$5 \cdot 10^5$	6,9	9,0	11,8	12,9	17,7	29,4
	$1 \cdot 10^6$	5,6	10,2	9,7	14,9	14,5	33,2
	$2 \cdot 10^6$	4,6	11,2	8,0	16,5	11,8	36,4
	$5 \cdot 10^6$	3,5	12,3	6,2	18,1	9,1	39,6
	$1 \cdot 10^7$	3,5	12,3	6,2	18,1	7,4	41,6
	$5 \cdot 10^7$	3,5	12,3	6,2	18,1	4,6	44,9
	$\geq 10^8$	3,5	12,3	6,2	18,1	3,8	45,9

Table C42: Characteristic resistances of anchor channels JXA and channel bolts under fatigue tension load with n load cycles with lower load share ($S_{lok} = 2{,}25 N_{Elok}/N_{Rk,c(p)} \leq 0{,}8$) – concrete cone and pullout failure[1)]

Anchor channel		JXA								
	Load cycles n	$\eta_{k,c,fat} = \eta_{k,p,fat}$ [-]								
		S_{lok}								
		0,0	0,1	0,2	0,3	0,4	0,5	0,6	0,7	0,8
Reduction factor for $\Delta N_{Rk,c,E,n} = \eta_{k,c,fat} \cdot N_{Rk,c}$ $\Delta N_{Rk,p,E,n} = \eta_{k,p,fat} \cdot N_{Rk,p}$ Static resistances $N_{Rk,c}$ and $N_{Rk,p}$ according to Annex C10	$\leq 10^4$	0,725	0,668	0,600	0,527	0,450	0,370	0,288	0,205	0,120
	$2 \cdot 10^4$	0,704	0,650	0,585	0,514	0,439	0,360	0,279	0,197	0,114
	$5 \cdot 10^4$	0,677	0,627	0,566	0,497	0,424	0,347	0,268	0,188	0,106
	$1 \cdot 10^5$	0,656	0,610	0,551	0,484	0,412	0,337	0,260	0,181	0,100
	$2 \cdot 10^5$	0,636	0,592	0,536	0,471	0,401	0,328	0,251	0,174	0,094
	$5 \cdot 10^5$	0,608	0,569	0,516	0,454	0,386	0,315	0,240	0,164	0,087
	$1 \cdot 10^6$	0,588	0,551	0,501	0,441	0,375	0,305	0,232	0,157	0,081
	$2 \cdot 10^6$	0,567	0,534	0,486	0,428	0,364	0,295	0,223	0,150	0,075
	$5 \cdot 10^6$	0,539	0,511	0,466	0,411	0,349	0,282	0,212	0,140	0,067
	$1 \cdot 10^7$	0,519	0,493	0,451	0,398	0,337	0,272	0,204	0,133	0,061
	$2 \cdot 10^7$	0,498	0,476	0,436	0,385	0,326	0,262	0,195	0,126	0,055
	$5 \cdot 10^7$	0,471	0,453	0,416	0,367	0,311	0,250	0,184	0,116	0,047
	10^8	0,450	0,435	0,401	0,354	0,300	0,240	0,176	0,109	0,041

[1)] N_{Elok} is the characteristic lower cyclic load on the anchor

For Design method I or II for assessment method C according to EOTA TR050, June 2022 (continued)

Table C43: Characteristic resistances ($\Delta V_{Rk,s,y,lo,n}$ and $\Delta V_{Rk,s,x,lo,n}$) of anchor channels JXA and channel bolts under fatigue shear[1)] load with n load cycles with characteristic lower load ($V_{lok,s,y,n}$ and $V_{lok,s,x,n}$) – steel failure

Anchor channel		JXA			
		W64/44			
	Load cycles n	$\Delta V_{Rk,s,y,lo,n}$ [kN]	$V_{lok,s,y,n}$ [kN]	$\Delta V_{Rk,s,x,lo,n}$ [kN]	$V_{lok,s,x,n}$ [kN]
Characteristic resistances under fatigue shear load with static preload	$\leq 10^4$	91,1	0,0	50,4	0,0
	$2 \cdot 10^4$	76,8	12,6	46,5	0,0
	$5 \cdot 10^4$	61,4	28,3	41,9	0,0
	$1 \cdot 10^5$	51,8	38,0	38,7	0,0
	$2 \cdot 10^5$	43,7	46,2	35,7	0,0
	$5 \cdot 10^5$	34,9	55,2	32,2	0,0
	$1 \cdot 10^6$	29,4	60,7	29,7	0,0
	$2 \cdot 10^6$	24,8	65,4	27,4	0,0
	$5 \cdot 10^6$	19,8	70,4	24,7	0,0
	$1 \cdot 10^7$	16,7	73,6	22,8	0,0
	$2 \cdot 10^7$	14,1	76,4	21,1	0,0
	$5 \cdot 10^7$	11,3	79,3	18,9	0,0
	$\geq 10^8$	9,5	81,1	17,5	0,0

1) Perpendicular to the longitudinal axis of the channel and in the direction of the longitudinal axis of the channel

Table C44: Characteristic resistances of anchor channels JXA under fatigue shear load with n load cycles with lower load share ($S_{y,lok} = 2{,}25V_{y,Elok}/V_{Rk,c(p)} \leq 0{,}8$ and $S_{x,lok} = 2{,}25V_{x,Elok}/V_{Rk,cp} \leq 0{,}8$) – concrete pry-out[1)]

Anchor channel		JXA								
	Load cycles n	$\eta_{k,cp,Vy,fat}$ and $\eta_{k,cp,Vx,fat}$ [-]								
		$S_{y,lok}$ and $S_{x,lok}$								
		0,0	0,1	0,2	0,3	0,4	0,5	0,6	0,7	0,8
Reduction factor for $\Delta V_{Rk,cp,y,E,n} = \eta_{cp,Vy,fat} \cdot V_{Rk,cp}$ and $\Delta V_{Rk,cp,x,E,n} = \eta_{cp,Vx,fat} \cdot V_{Rk,cp}$ Static resistances $V_{Rk,cp}$ according to Annex C18	$\leq 10^4$	0,725	0,668	0,600	0,527	0,450	0,370	0,288	0,205	0,120
	$2 \cdot 10^4$	0,704	0,650	0,585	0,514	0,439	0,360	0,279	0,197	0,114
	$5 \cdot 10^4$	0,677	0,627	0,566	0,497	0,424	0,347	0,268	0,188	0,106
	$1 \cdot 10^5$	0,656	0,610	0,551	0,484	0,412	0,337	0,260	0,181	0,100
	$2 \cdot 10^5$	0,636	0,592	0,536	0,471	0,401	0,328	0,251	0,174	0,094
	$5 \cdot 10^5$	0,608	0,569	0,516	0,454	0,386	0,315	0,240	0,164	0,087
	$1 \cdot 10^6$	0,588	0,551	0,501	0,441	0,375	0,305	0,232	0,157	0,081
	$2 \cdot 10^6$	0,567	0,534	0,486	0,428	0,364	0,295	0,223	0,150	0,075
	$5 \cdot 10^6$	0,539	0,511	0,466	0,411	0,349	0,282	0,212	0,140	0,067
	$1 \cdot 10^7$	0,519	0,493	0,451	0,398	0,337	0,272	0,204	0,133	0,061
	$2 \cdot 10^7$	0,498	0,476	0,436	0,385	0,326	0,262	0,195	0,126	0,055
	$5 \cdot 10^7$	0,471	0,453	0,416	0,367	0,311	0,250	0,184	0,116	0,047
	10^8	0,450	0,435	0,401	0,354	0,300	0,240	0,176	0,109	0,041

1) $V_{y,Elok}$ is the characteristic lower cyclic shear load on the anchor perpendicular to the longitudinal axis of the channel on the anchor and $V_{x,Elok}$ is the characteristic lower cyclic shear load in the direction of the longitudinal axis of the channel on the anchor

For Design method I or II for assessment method C according to EOTA TR050, June 2022 (continued)

For steel failure under combined tension and shear loading the following exponent for verification of steel failure according to EOTA TR 050 [2], Table 3.6 are given:

k_{sn} = 0,7 for channel bolts with thread diameter M16 and larger

For Design method I and II for assessment method A1, A2, B, or C according to EOTA TR050, June 2022

In absence of other national regulations the following partial factors are recommended for design method I and II for all failure modes:

$\gamma_{Ms,fat}$ = 1,35 for steel
$\gamma_{Mc,fat} = \gamma_{Mp,fat} = \gamma_{Mcp,fat}$ = 1,50 for concrete

JORDAHL anchor channel JTA, JZA, JXA, and JXA-PC	**Annex C27**
Performance Characteristic resistances under fatigue interaction load according to assessment method C (JXA), partial factors	

For seismic performance category C1

Table C45: Combinations of anchor channels JTA W, JZA, JXA, and JXA-PC with channel bolts for seismic loading

Anchor channel		Channel bolt			
		Type	Thread diameter	Strength grade	Surface
JTA	W40/22	JKC	M12	8.8	
			M16	A4-70	
	W40+	JKC	M12	8.8	
			M16	A4-70	
	W50/30	JKB	M16	8.8	
			M20	A4-70	
	W50+	JKB	M16	8.8	
			M20	A4-70	
	W53/34	JKB	M16	8.8	
			M20	A4-70	
JZA	K41/22	JZS	M12	8.8	hot-dip galvanized [1]
			M16	A4-50	
JXA	W29/20	JXD	M10	8.8	
			M12		
	W38/23	JXH	M12	8.8	
			M16	A4-70	
	W53/34	JXB	M16	8.8	
			M20	A4-70	
	W64/44	JXE	M20	8.8	
			M24		
JXA-PC	W53/34	JXB	M16	8.8	
			M20		

[1] Only for steel, strength grade 8.8

JORDAHL anchor channel JTA, JZA, JXA, and JXA-PC

Performance
Overview (seismic performance category C1)

Annex C28

Table C46: Characteristic resistances under seismic tension load – Steel failure of anchor channel (JTA [1])

Anchor channel			**JTA**				
			W40/22	**W40+**	**W50/30**	**W50+**	**W53/34**
Steel failure: Anchor							
Characteristic resistance	$N_{Rk,s,a,eq}$	[kN]	20,0	20,0	32,0	32,0	32,0
Partial factor	$\gamma_{Ms,eq}$ [2]		1,4				
Steel failure: Connection between anchor and channel							
Characteristic resistance	$N_{Rk,s,c,eq}$	[kN]	20,0	20,0	31,0	31,0	31,0
Partial factor	$\gamma_{Ms,ca,eq}$ [2]		1,8				
Steel failure: Local flexure of channel lips							
Spacing of channel bolts for $N_{Rk,s,l,eq}$	$s_{l,N}$	[mm]	79	79	98	98	105
Characteristic resistance	$N^0_{Rk,s,l,eq}$	[kN]	38,0	38,0	38,0	38,0	38,0
Partial factor	$\gamma_{Ms,l,eq}$ [2]		1,8				

[1] In combination with notching bolts
[2] In absence of other national regulations

Table C47: Characteristic resistances under seismic tension load – Steel failure of anchor channel (JZA and JXA)

Anchor channel			**JZA**	**JXA**			
			K41/22	**W29/20**	**W38/23**	**W53/34**	**W64/44**
Steel failure: Anchor							
Characteristic resistance	$N_{Rk,s,a,eq}$	[kN]	25,4 [2]	20,3 (– [3]) [2]	31,4 [2]	57,1 [2]	115,0 (– [3]) [2]
Partial factor	$\gamma_{Ms,eq}$ [1]		1,8				
Steel failure: Connection between anchor and channel							
Characteristic resistance	$N_{Rk,s,c,eq}$	[kN]	14,5 (18,0) [2]	15,4 (– [3]) [2]	35,3 (39,0) [2]	72,6 (49,0) [2]	106,3 (– [3]) [2]
Partial factor	$\gamma_{Ms,ca,eq}$ [1]		1,8				
Steel failure: Local flexure of channel lips							
Spacing of channel bolts for $N_{Rk,s,l,eq}$	$s_{l,N}$	[mm]	82	58	76	105	128
Characteristic resistance	$N^0_{Rk,s,l,eq}$	[kN]	14,5 (18,0) [2]	15,4 (– [3]) [2]	35,3 (42,8) [2]	72,6 (64,6) [2]	106,3 (– [3]) [2]
Partial factor	$\gamma_{Ms,l,eq}$ [1]		1,8				

[1] In absence of other national regulations
[2] Values in brackets for stainless steel
[3] No performance assessed

Table C48: Characteristic resistances under seismic tension load – Steel failure of anchor channel (JXA-PC)

Anchor channel			**JXA-PC**
			W53/34
Steel failure: Anchor			
Characteristic resistance	$N_{Rk,s,a,eq}$	[kN]	84,7
Partial factor	$\gamma_{Ms,eq}$ [1)]		1,4
Steel failure: Connection between anchor and channel			
Characteristic resistance	$N_{Rk,s,c,eq}$	[kN]	87,5
Partial factor	$\gamma_{Ms,ca,eq}$ [1)]		1,8
Steel failure: Local flexure of channel lips			
Spacing of channel bolts for $N_{Rk,s,l}$	$s_{l,N}$	[mm]	105
Characteristic resistance	$N^0_{Rk,s,l,eq}$	[kN]	87,5
Partial factor	$\gamma_{Ms,l,eq}$ [1)]		1,8

[1)] In absence of other national regulations

Table C49: Characteristic flexural resistance of anchor channel under seismic tension load (JTA [1])

Anchor channel				**JTA**				
				W40/22	**W40+**	**W50/30**	**W50+**	**W53/34**
Steel failure: Flexure of channel								
Characteristic flexural resistance of channel	Round anchor, I-anchor	$M_{Rk,s,flex,eq}$	[Nm]	1138	1138	1756	1756	1756
	T-anchor			703	– [3]	1416	– [3]	1416
Partial factor		$\gamma_{Ms,flex,eq}$ [2]		1,15				

[1] In combination with notching bolts
[2] In absence of other national regulations
[3] No performance assessed

JORDAHL anchor channel JTA, JZA, JXA, and JXA-PC

Performance
Characteristic resistances under seismic tension load (seismic performance category C1) – steel failure anchor channels (JTA)

Annex C32

Table C50: Characteristic flexural resistance of anchor channel under seismic tension load (JZA and JXA)

Anchor channel				**JZA**	**JXA**			
				K41/22	**W29/20**	**W38/23**	**W53/34**	**W64/44**
Steel failure: Flexure of channel								
Characteristic flexural resistance of channel	Round anchor	$M_{Rk,s,flex,eq}$	[Nm]	629 (765) [2]	486	1581 (1052) [2]	4147 (3247) [2]	– [3]
	I-anchor			– [3]	– [3]	1581	4147	7078
	T-anchor			– [3]	– [3]	832	2476	– [3]
Partial factor		$\gamma_{Ms,flex,eq}$ [1]		1,15				

[1] In absence of other national regulations
[2] Value in bracket for stainless steel
[3] No performance assessed

Table C51: Characteristic flexural resistance of anchor channel under seismic tension load (JXA-PC)

Anchor channel			**JXA-PC**
			W53/34
Steel failure: Flexure of channel			
Characteristic flexural resistance of channel	$M_{Rk,s,flex,eq}$	[Nm]	4546
Partial factor	$\gamma_{Ms,flex,eq}$ [1]		1,15

[1] In absence of other national regulations

Table C52: Characteristic resistances under tension load – Steel failure of channel bolts (JTA)

Channel bolt				**JKC**		**JKB**	
Thread diameter				**M12**	**M16**	**M16**	**M20**
Steel failure: Channel bolt							
Characteristic resistance [2]	$N_{Rk,s,eq}$	[kN]	8.8 [1]	67,4	67,4	125,6	125,6
			70 [1]	59,0	59,0	109,9	109,9
Partial factor	$\gamma_{Ms,eq}$ [3]		8.8 [1]	1,50			
			70 [1]	1,87			

[1] Materials according to Annex A2 to A4
[2] In conformity to EN ISO 898-1:2013 + AC:2013
[3] In absence of other national regulations

Table C53: Characteristic resistances under tension load – Steel failure of channel bolts (JZA, JXA, and JXA-PC)

Channel bolt				**JZS**		**JXD**		**JXH, JXB**			**JXE**	
Thread diameter				**M12**	**M16**	**M10**	**M12**	**M12**	**M16**	**M20**	**M20**	**M24**
Steel failure: Channel bolt												
Characteristic resistance [2]	$N_{Rk,s,eq}$	[kN]	8.8 [1]	48,9	98,9	37,1	53,9	67,4	125,6	196,0	196,0	282,4
			50 [1]	42,2	78,5	– [4]	– [4]	– [4]	– [4]	– [4]	– [4]	– [4]
			70 [1]	– [4]	– [4]	– [4]	– [4]	59,0	109,9	171,5	– [4]	– [4]
Partial factor	$\gamma_{Ms,eq}$ [3]		8.8 [1]	1,50								
			50 [1]	2,86								
			70 [1]	1,87								

[1] Materials according to Annex A2 to A4
[2] In conformity to EN ISO 898-1:2013 + AC:2013
[3] In absence of other national regulations
[4] No performance assessed

JORDAHL anchor channel JTA, JZA, JXA, and JXA-PC

Performance
Characteristic resistances under seismic tension load (seismic performance category C1) – steel failure channels bolts

Annex C34

Table C54: Characteristic resistances under seismic shear load – Steel failure of anchor channel (JTA [1])

Anchor channel			**JTA**				
			W40/22	**W40+**	**W50/30**	**W50+**	**W53/34**
Steel failure: Anchor							
Characteristic resistance	$V_{Rk,s,a,y,eq}$	[kN]	35,0	35,0	52,0	52,0	52,0
Characteristic resistance	$V_{Rk,s,a,x,eq}$	[kN]	10,5 (12,2) [3]	10,5 (12,2) [3]	13,3 (19,0) [3]	13,3 (19,0) [3]	13,3 (19,0) [3]
Partial factor	$\gamma_{Ms,eq}$ [2]		1,5				
Steel failure: Connection between anchor and channel							
Characteristic resistance	$V_{Rk,s,c,y,eq}$	[kN]	35,0	35,0	52,0	52,0	52,0
Characteristic resistance	$V_{Rk,s,c,x,eq}$	[kN]	8,6 (10,0) [3]	8,6 (10,0) [3]	10,9 (15,5) [3]	10,9 (15,5) [3]	10,9 (15,5) [3]
Partial factor	$\gamma_{Ms,ca,eq}$ [2]		1,8				
Steel failure: Local flexure of channel lips							
Spacing of channel bolts for $V_{Rk,s,l,eq}$	$s_{l,V}$	[mm]	79	79	98	98	105
Characteristic resistance	$V^0_{Rk,s,l,y,eq}$	[kN]	35,0	35,0	52,0	52,0	52,0
Partial factor	$\gamma_{Ms,l,eq}$ [2]		1,8				
Characteristic resistance	$V_{Rk,s,l,x,eq}$	[kN]	5,2 (2,9) [3]		9,3 (4,7) [3]		
Installation factor	γ_{inst}		1,4		1,2 (1,4) [3]		
Partial factor	$\gamma_{Ms,l,x,eq}$ [2]		1,8				

[1] In combination with notching bolts
[2] In absence of other national regulations
[3] Values in brackets for stainless steel

Table C55: Characteristic resistances under seismic shear load – Steel failure of anchor channel (JZA and JXA)

Anchor channel			**JZA**	**JXA**			
			K41/22	**W29/20**	**W38/23**	**W53/34**	**W64/44**
Steel failure: Anchor							
Characteristic resistance	$V_{Rk,s,a,y,eq}$	[kN]	24,2 (28,0) [2]	18,0 (– [3]) [2]	48,3 (38,3) [2]	101,1 (82,5) [2]	121,0 (– [3]) [2]
Characteristic resistance	$V_{Rk,s,a,x,eq}$	[kN]	15,3	15,3 (– [3]) [2]	18,8	34,3	69,0 (– [3]) [2]
Partial factor	$\gamma_{Ms,eq}$ [1]		1,5				
Steel failure: Connection between anchor and channel							
Characteristic resistance	$V_{Rk,s,c,y,eq}$	[kN]	24,2 (28,0) [2]	18,0 (– [3]) [2]	48,3 (38,3) [2]	101,1 (82,5) [2]	121,0 (– [3]) [2]
Characteristic resistance	$V_{Rk,s,c,x,eq}$	[kN]	8,7 (10,8) [2]	11,6 (– [3]) [2]	21,2 (23,5) [2]	43,6 (29,4) [2]	63,8 (– [3]) [2]
Partial factor	$\gamma_{Ms,ca,eq}$ [1]		1,8				
Steel failure: Local flexure of channel lips							
Spacing of channel bolts for $V_{Rk,s,l,eq}$	$s_{l,V}$	[mm]	82	58	76	105	128
Characteristic resistance	$V^0_{Rk,s,l,y,eq}$	[kN]	24,2 (28,0) [2]	18,0 (– [3]) [2]	48,3 (38,3) [2]	101,1 (82,5) [2]	121,0 (– [3]) [2]
Partial factor	$\gamma_{Ms,l,eq}$ [1]		1,8				
Characteristic resistance	$V_{Rk,s,l,x,eq}$	[kN]	10,0 (10,7) [2]	12,0 (– [3]) [2]	19,4 (11,9) [2]	33,8 (22,8) [2]	64,5 (– [3]) [2]
Installation factor	γ_{inst}		1,0				
Partial factor	$\gamma_{Ms,l,x,eq}$ [1]		1,8				

[1] In absence of other national regulations
[2] Values in brackets for stainless steel
[3] No performance assessed

Table C56: Characteristic resistances under seismic shear load – Steel failure of anchor channel (JXA-PC)

Anchor channel			**JXA-PC**
			W53/34
Steel failure: Anchor			
Characteristic resistance	$V_{Rk,s,a,y,eq}$	[kN]	101,1
Characteristic resistance	$V_{Rk,s,a,x,eq}$	[kN]	50,8
Partial factor	$\gamma_{Ms,eq}$ [1)]		1,5
Steel failure: Connection between anchor and channel			
Characteristic resistance	$V_{Rk,s,c,y,eq}$	[kN]	101,1
Characteristic resistance	$V_{Rk,s,c,x,eq}$	[kN]	43,7
Partial factor	$\gamma_{Ms,ca,eq}$ [1)]		1,8
Steel failure: Local flexure of channel lips			
Spacing of channel bolts for $V_{Rk,s,l,eq}$	$s_{l,V}$	[mm]	105
Characteristic resistance	$V^0_{Rk,s,l,y,eq}$	[kN]	101,1
Partial factor	$\gamma_{Ms,l,eq}$ [1)]		1,8
Characteristic resistance	$V_{Rk,s,l,x,eq}$	[kN]	48,0
Installation factor	γ_{inst}		1,0
Partial factor	$\gamma_{Ms,l,x,eq}$ [1)]		1,8

[1)] In absence of other national regulations

Table C57: Characteristic resistances under seismic shear loads – Steel failure of channel bolts (JTA)

Channel bolt				**JKC**		**JKB**	
Thread diameter				**M12**	**M16**	**M16**	**M20**
Steel failure: Channel bolt							
Characteristic resistance [2]	$V_{Rk,s,eq}$	[kN]	8.8[1]	33,7	33,7	62,8	62,8
			70[1]	35,4	35,4	65,9	65,9
Partial factor	$\gamma_{Ms,eq}$[3]		8.8[1]	1,25			
			70[1]	1,56			

[1] Materials according to Annex A2 to A4
[2] In conformity to EN ISO 898-1:2013 + AC:2013
[3] In absence of other national regulations

Table C58: Characteristic resistances under seismic shear loads – Steel failure of channel bolts (JZA, JXA, and JXA-PC)

Channel bolt				**JZS**		**JXD**		**JXH, JXB,**			**JXE**	
Thread diameter				**M12**	**M16**	**M10**	**M12**	**M12**	**M16**	**M20**	**M20**	**M24**
Steel failure: Channel bolt												
Characteristic resistance [2]	$V_{Rk,s,eq}$	[kN]	8.8[1]	33,7	62,8	23,2	33,7	33,7	62,8	98,0	98,0	141,2
			50[1]	25,3	47,1	– [4]	– [4]	– [4]	– [4]	– [4]	– [4]	– [4]
			70[1]	– [4]	– [4]	– [4]	– [4]	31,9	59,3	92,6	– [4]	– [4]
Partial factor	$\gamma_{Ms,eq}$[3]		8.8[1]	1,25								
			50[1]	2,38								
			70[1]	1,56								

[1] Materials according to Annex A2 bis A4
[2] In conformity to EN ISO 898-1:2013 + AC:2013
[3] In absence of other national regulations
[4] No performance assessed

Table C59: Characteristic resistances under fire exposure

Anchor channel					JTA								
					K28/15	K38/17	K40/25 W40/22	W40+	K50/30 W50/30	W50+	K53/34 W53/34	W55/42	K72/48 W72/48
Steel failure: Anchor, connection between anchor and channel, local flexure of channel lip, channel bolt													
Characteristic resistance	R30	M8	$N_{Rk,s,fi}$ = $V_{Rk,s,y,fi}$	[kN]	1,0	– [1]	– [1]	– [1]	– [1]	– [1]	– [1]	– [1]	– [1]
		M10			1,0	1,7	1,9	1,9	1,9	1,9	1,9	– [1]	– [1]
		M12			1,9	1,7	1,9 3,0	3,0	2,5	2,5	2,5	– [1]	– [1]
		M16			– [1]	3,2	3,6 7,8	7,8	4,0 6,0	6,0	6,0	6,3	– [1]
		M20			– [1]	– [1]	– [1]	– [1]	4,0 9,5	9,5	8,9 10,1	10,3	10,3
		M24			– [1]	– [1]	– [1]	– [1]	– [1]	– [1]	– [1]	14,8	14,8
	R60	M8			0,8	– [1]	– [1]	– [1]	– [1]	– [1]	– [1]	– [1]	– [1]
		M10			0,8	1,5	1,5	1,5	1,5	1,5	1,5	– [1]	– [1]
		M12			1,3	1,5	1,5 2,6	2,6	2,5	2,5	2,5	– [1]	– [1]
		M16			– [1]	2,4	3,6 5,3	5,3	3,5 4,5	4,5	4,5	4,8	– [1]
		M20			– [1]	– [1]	– [1]	– [1]	3,5 7,1	7,1	6,5 7,5	7,6	7,6
		M24			– [1]	– [1]	– [1]	– [1]	– [1]	– [1]	– [1]	11,1	11,1
	R90	M8			0,6	– [1]	– [1]	– [1]	– [1]	– [1]	– [1]	– [1]	– [1]
		M10			0,6	1,0	1,1	1,1	1,1	1,1	1,1	– [1]	– [1]
		M12			0,7	1,0	1,1 1,6	1,6	1,6	1,6	1,6	– [1]	– [1]
		M16			– [1]	1,4	2,0 2,9	2,9	2,5 3,0	3,0	3,0	3,3	– [1]
		M20			– [1]	– [1]	– [1]	– [1]	2,5 4,8	4,8	4,2 4,8	4,9	4,9
		M24			– [1]	– [1]	– [1]	– [1]	– [1]	– [1]	– [1]	7,3	7,3
Partial factor			$\gamma_{Ms,fi}$ [2]		1,0								

[1] No performance assessed
[2] In absence of other national regulations

Table C59 (continuation): Characteristic resistances under fire exposure

Anchor channel					**JTA**								
					K28/15	**K38/17**	**K40/25** **W40/22**	**W40+**	**K50/30** **W50/30**	**W50+**	**K53/34** **W53/34**	**W55/42**	**K72/48** **W72/48**
Steel failure: Anchor, connection between anchor and channel, local flexure of channel lip, channel bolt													
Characteristic resistance	R120	M8	$N_{Rk,s,fi}$ = $V_{Rk,s,y,fi}$	[kN]	0,5	– [1]	– [1]	– [1]	– [1]	– [1]	– [1]	– [1]	– [1]
		M10			0,5	0,8	0,8	0,8	0,8	0,8	0,8	– [1]	– [1]
		M12			0,5	0,8	0,8 1,1	1,1	1,2	1,2	1,2	– [1]	– [1]
		M16			– [1]	1,0	1,2 1,6	1,6	2,1 2,3	2,2 2,3	2,2 2,3	2,6	– [1]
		M20			– [1]	– [1]	– [1]	– [1]	2,1 3,6	3,6	3,0 3,5	3,6	3,6
		M24			– [1]	– [1]	– [1]	– [1]	– [1]	– [1]	– [1]	5,4	5,4
Partial factor			$\gamma_{Ms,fi}$ [2]		1,0								

[1] No performance assessed
[2] In absence of other national regulations

Fig. 1

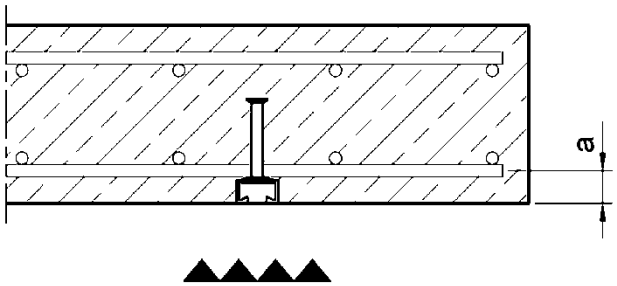

Fig. 2

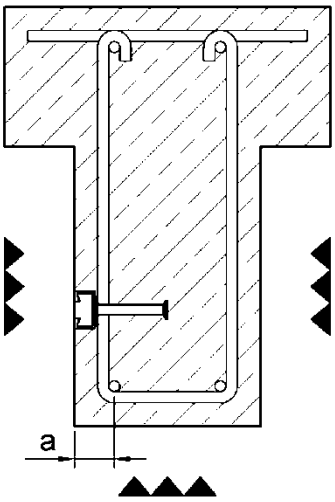

Table C60: Minimum axis distance under fire exposure

Anchor channel				JTA						
				K28/15	K38/17	K40/25 W40/22 W40+	K50/30 W50/30 W50+	K53/34 W53/34	W55/42	K72/48 W72/48
Minimum axis distance	R30	a	[mm]	35	35	35	35	50	50	50
	R60			35	35	35	35	50	50	50
	R90			45	45	45	45	50	50	50
	R120			60	60	60	60	65	70	70

JORDAHL anchor channel JTA, JZA, JXA, and JXA-PC

Performance
Characteristic resistances under fire exposure

Annex C42